CONSTRUCTION DOCUMENTS FOR:

Middle Fork Greenway Section 5-
Boone Gorge Park

PROJECT DIRECTORY

DEVELOPER/OWNER
BLUE RIDGE CONSERVANCY
416 AHO ROAD
BLOWING ROCK, NC 28605
(828) 264-2511
CONTACT: WENDY PATOPRSTY

CIVIL ENGINEERING
WARREN CONSULTING AND DESIGN
(P-1005)
850 9TH AVE NW
HICKORY, NC 28601
(828) 493-6988
CONTACT: MR. J. PATRICK WARREN, PE

ENVIRONMENTAL CONSULTANT
INTERFACE ENVIRONMENTAL
CONSUTLING, LLC.
476 HIDDEN POND RD
BOONE, NC 28607
(919) 656-4543
CONTACT: CARRIE CAVIN7ESS, PHD

VICINITY MAP

SHEET INDEX

CS	COVER SHEET
X	OVERALL
C1.0-C1.1	TRAIL SECTION 1
C2.0-C2.5	TRAIL SECTION 2
C3.0-C3.11	TRAIL SECTION 3
C4.0-C4.4	TRAILHEAD DESIGN
C5.0-C5.3	STREAM RESTORATION DESIGN
C6.0-C6.12	CONSTRUCTION DETAILS
X1.0-X3.2	ESC PLANS
X4.0-X4.7	ESC DETAILS
L1.0-L1.1	LANDSCAPE PLANS

STRUCTURAL DESIGNS BY OTHERS

ARETE: PRJ4026-MIDDLE FORK GREENWAY-BOONE GORGE PARK BOARDWALK

ARETE: PRJ3676-MIDDLE FORK GREENWAY-BOONE GORGE PARK BRIDGE 1 (UPSTREAM BRIDGE) ABUTMENT DESIGN

ARETE: PRJ3676-MIDDLE FORK GREENWAY-BOONE GORGE PARK BRIDGE 2 (DOWNSTREAM BRIDGE) ABUTMENT DESIGN

DRYE-McGLAMERY: PRJ2025045-NEW RESTROOMS

DRYE-McGLAMERY: PRJ2025045-PAVILION

North Carolina 811
www.nc811.org

CONTACT: CARRIE CAVINESS
(919) 656-4543

INTERFACE ENVIRONMENTAL CONSULTING, LLC

	REVISIONS:	
NO.	DESCRIPTION:	BY: DATE:

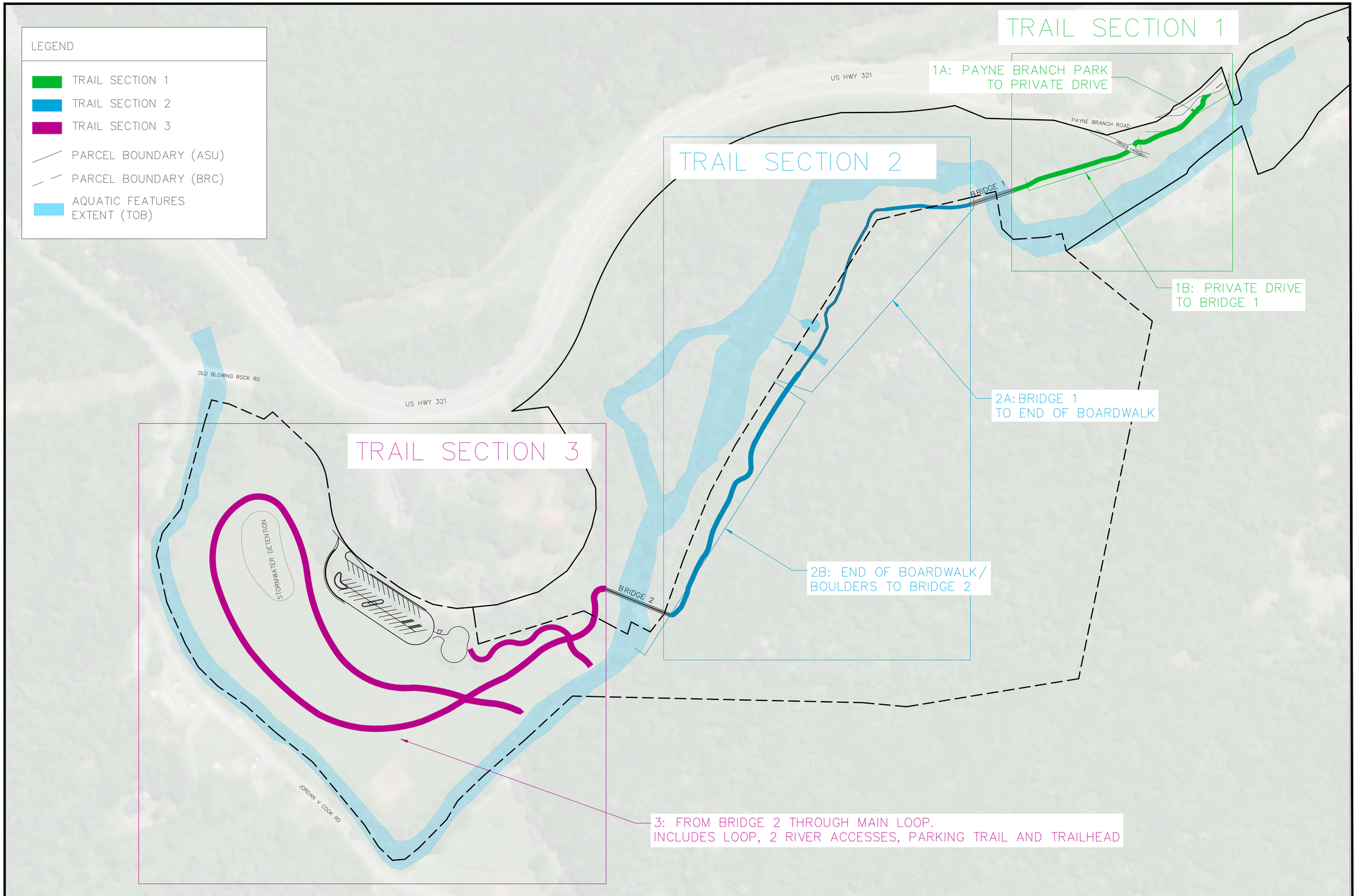

IEC

WARREN CONSULTING & DESIGN, PLLC
850 9th Ave NW HICKORY, NC P-1005

NORTH CAROLINA PROFESSIONAL SEAL 5380 WARREN PATRICK 4/17/24

REVISIONS DATE

PREPARED FOR: BLUE RIDGE CONSERVANCY

BOONE GORGE PARK SECTIONS – OVERALL

MIDDLE FORK GREENWAY

WATAUGA COUNTY, NC

SCALE: 1"=100'

0 100 200 Feet

SHEET X

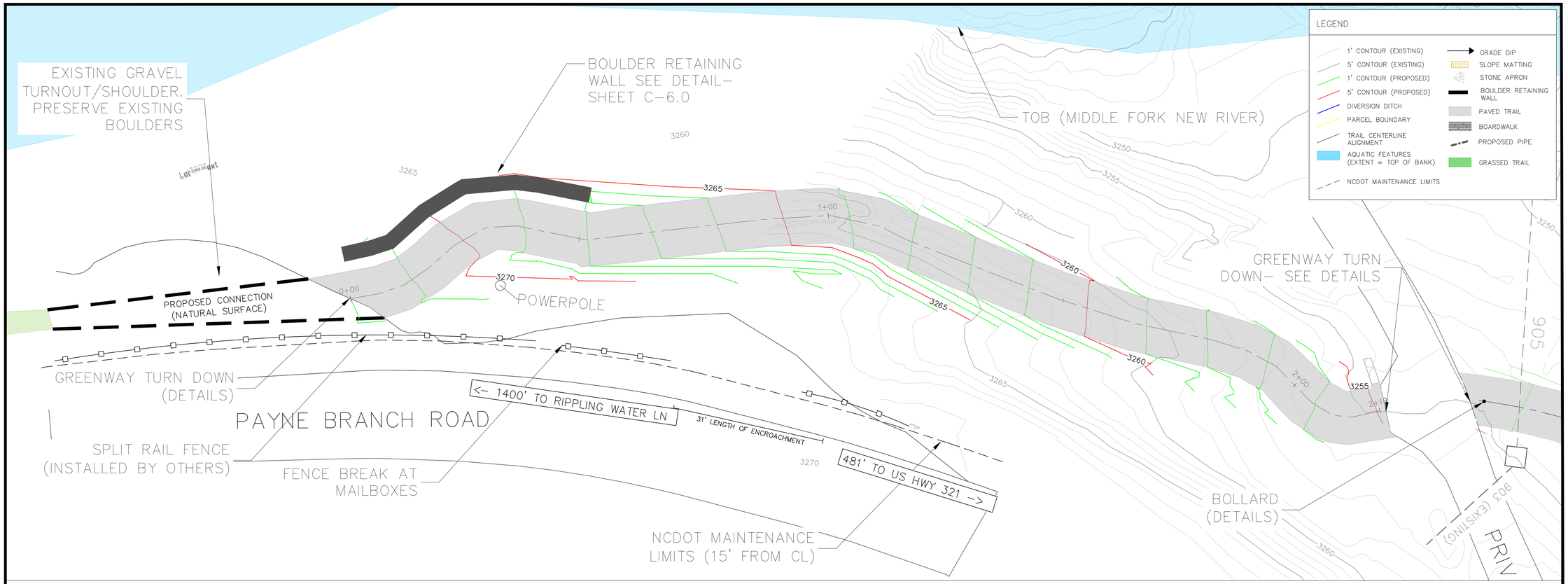

NOTES:
1. SEE DETAIL SHEET 6.1–6.5 FOR PAVED TRAIL/SHOULDER/SLOPE SPECIFICATIONS PER TRAIL SECTION.

EXISTING SURFACE
PROPOSED TRAIL SURFACE

Trail Alignment 1A
STA 0+00–2+19.82

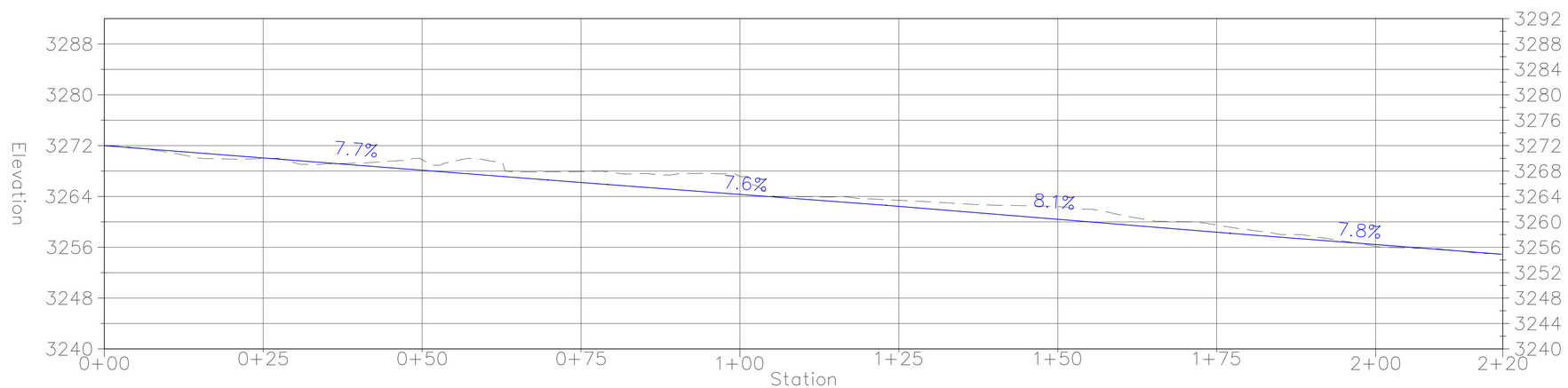

IEC

WARREN CONSULTING & DESIGN, PLLC
850 9th Ave NW HICKORY, NC P–1005

NORTH CAROLINA PROFESSIONAL ENGINEER SEAL 036380 WARREN PATRICK 4/17/24

DATE
REVISIONS

PREPARED FOR: BLUE RIDGE CONSERVANCY

BOONE GORGE PARK

TRAIL SECTION 1A STA 0+00–2+20
MIDDLE FORK GREENWAY
WATAUGA COUNTY, NC

SCALE: 1"=10'

SHEET C1.0

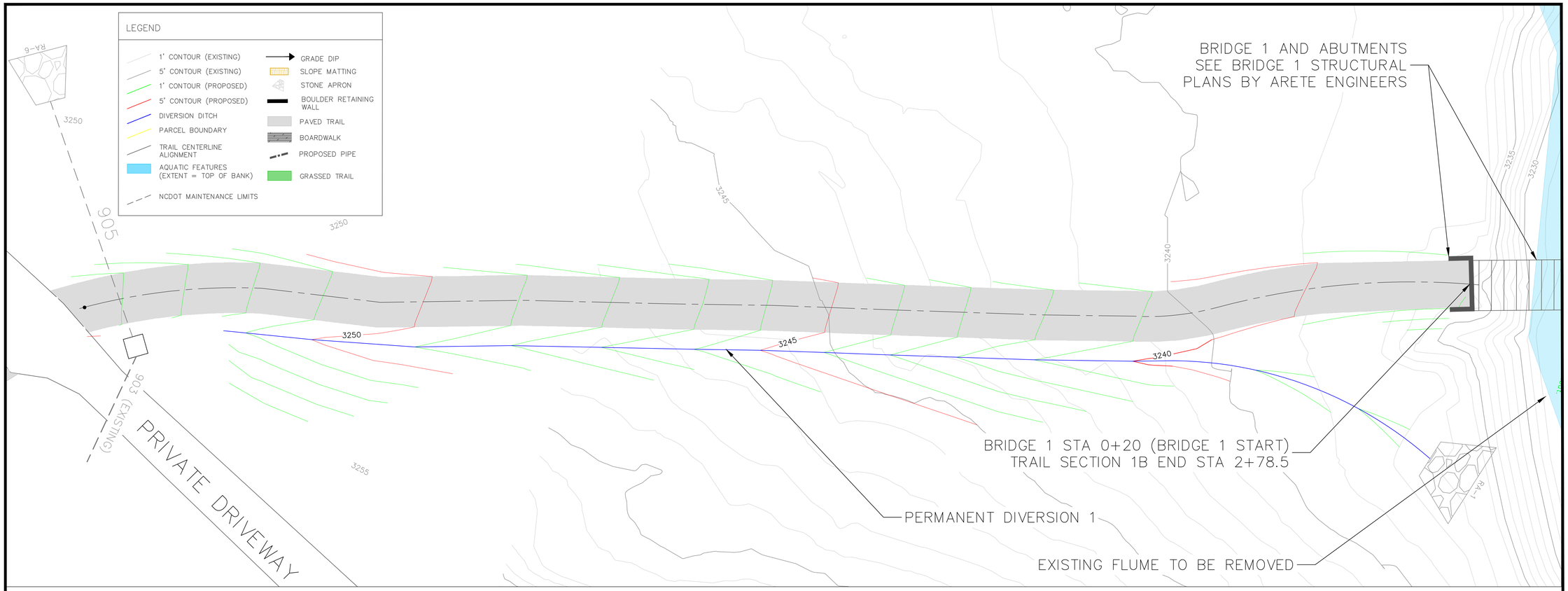

SEE BRIDGE 1 STRUCTURAL PLANS BY ARETE ENGINEERS FOR TIE-IN

Trail Alignment 1B
STA 0+00–2+78.5

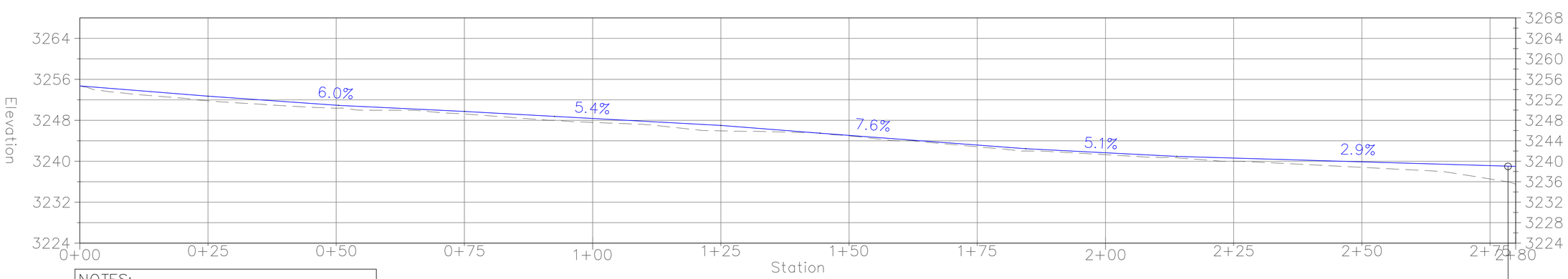

NOTES:
1. SEE DETAIL SHEET 6.1–6.5 FOR PAVED TRAIL/SHOULDER/SLOPE SPECIFICATIONS PER TRAIL SECTION.

IEC

WARREN CONSULTING & DESIGN, PLLC
850 9th Ave NW HICKORY, NC P-1005

NORTH CAROLINA PROFESSIONAL ENGINEER SEAL 053380 PATRICK WARREN 4/17/25

REVISIONS | DATE

PREPARED FOR: BLUE RIDGE CONSERVANCY

BOONE GORGE PARK

TRAIL SECTION 1B STA 0+00–2+78

MIDDLE FORK GREENWAY
WATAUGA COUNTY, NC

SCALE: 1"=10'

SHEET C1.1

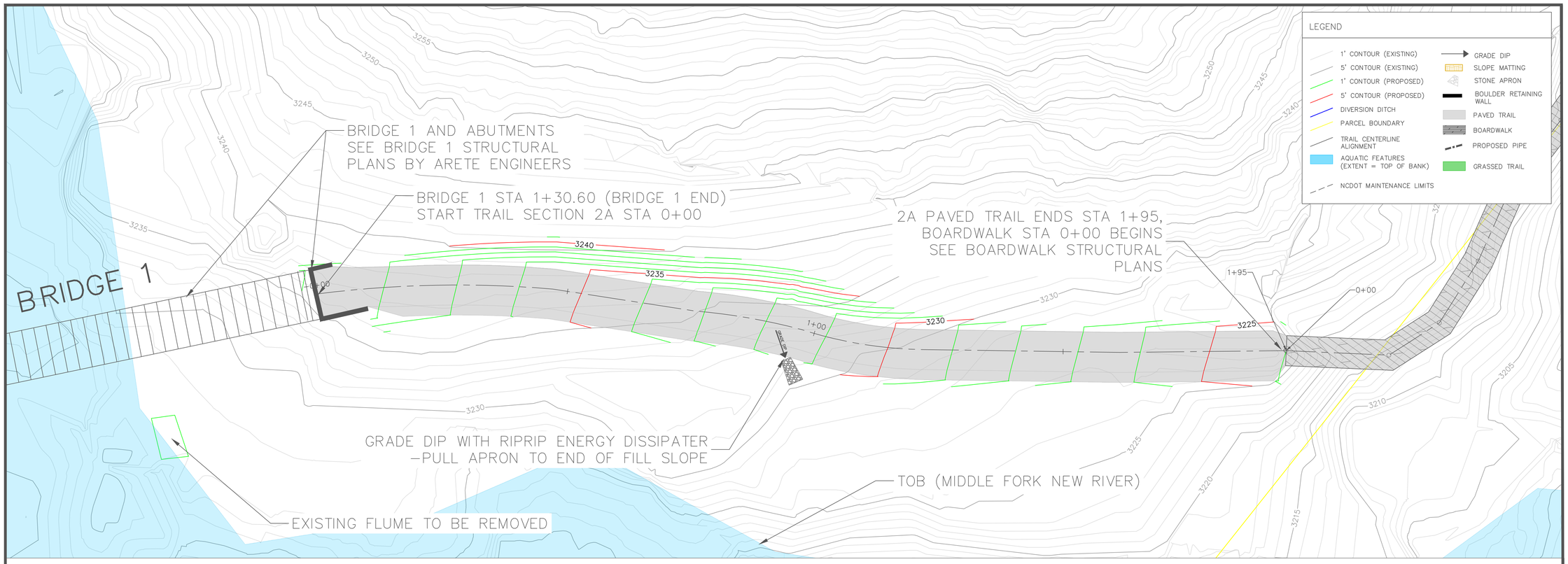

NOTES:
1. SEE DETAIL SHEET 6.1–6.5 FOR PAVED TRAIL/SHOULDER/SLOPE SPECIFICATIONS PER TRAIL SECTION.

EXISTING SURFACE
PROPOSED TRAIL SURFACE

TRAIL ALIGN 2A
STA 0+00–1+95

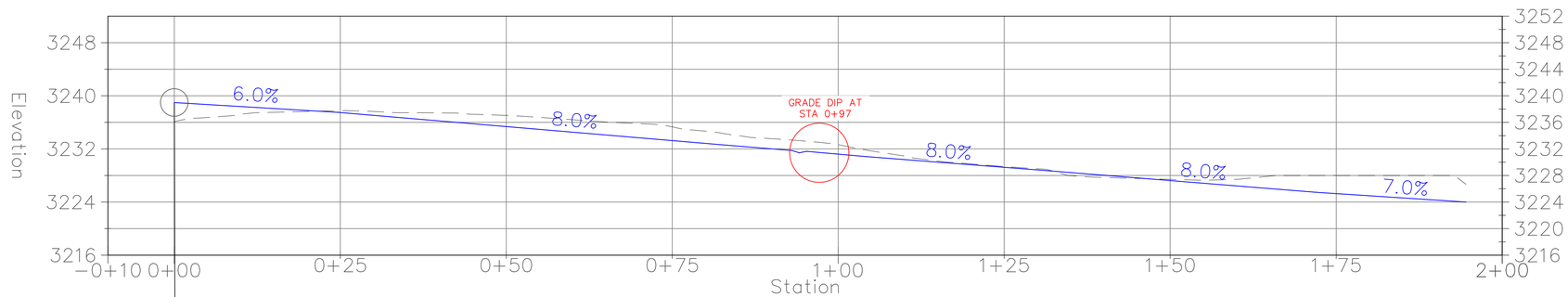

BRIDGE 1 DECK ELEVATION: 3238.17'

SEE BRIDGE 1 STRUCTURAL PLANS BY ARETE ENGINEERS FOR TIE–IN

IEC

WARREN CONSULTING & DESIGN, PLLC
850 9th Ave NW HICKORY, NC P–1005

NORTH CAROLINA PROFESSIONAL ENGINEER SEAL 036380 WARREN HEATHER RAYPRICK 4/17/24

REVISIONS DATE

PREPARED FOR: BLUE RIDGE CONSERVANCY

BOONE GORGE PARK

TRAIL SECTION 2A STA 0+00–1+98

MIDDLE FORK GREENWAY

WATAUGA COUNTY, NC

SCALE: 1"=10'

SHEET C2.0

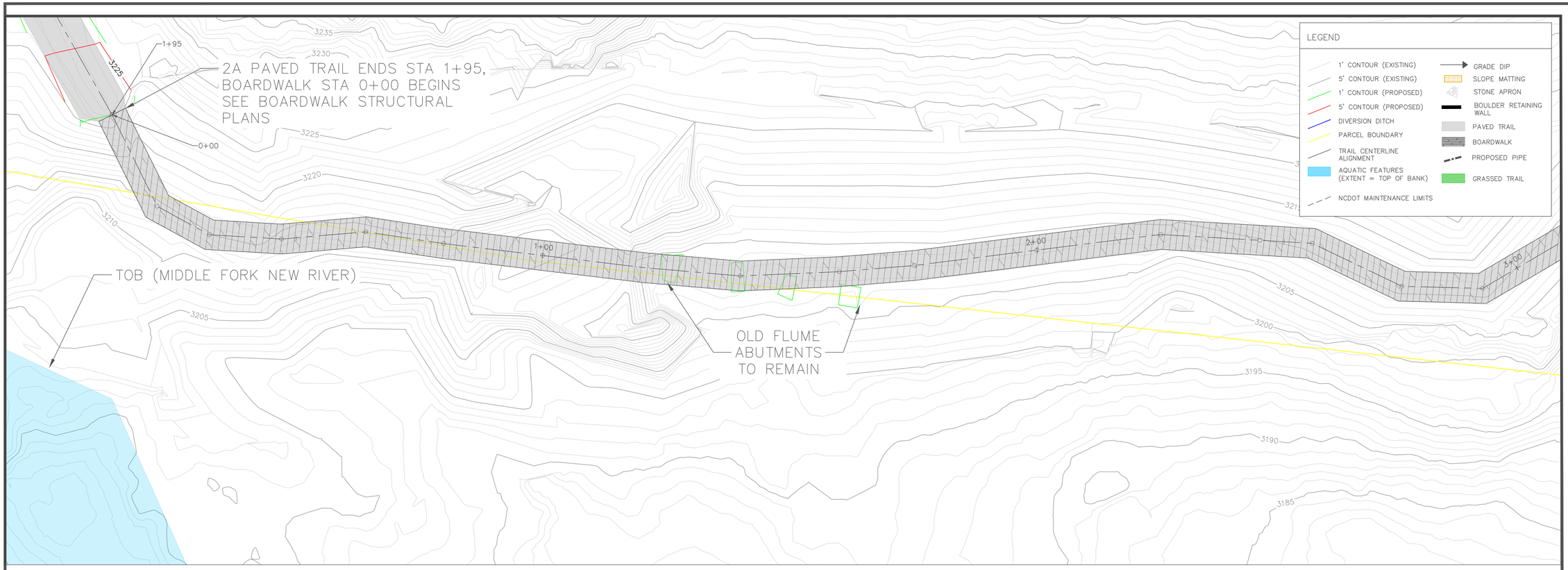

NOTES:
1. SEE DETAIL SHEET 6.1–6.5 FOR PAVED TRAIL/SHOULDER/SLOPE SPECIFICATIONS PER TRAIL SECTION.

TRAIL 2a BOARDWALK
STA 0+00 – 3+00

EXISTING SURFACE
PROPOSED TRAIL SURFACE

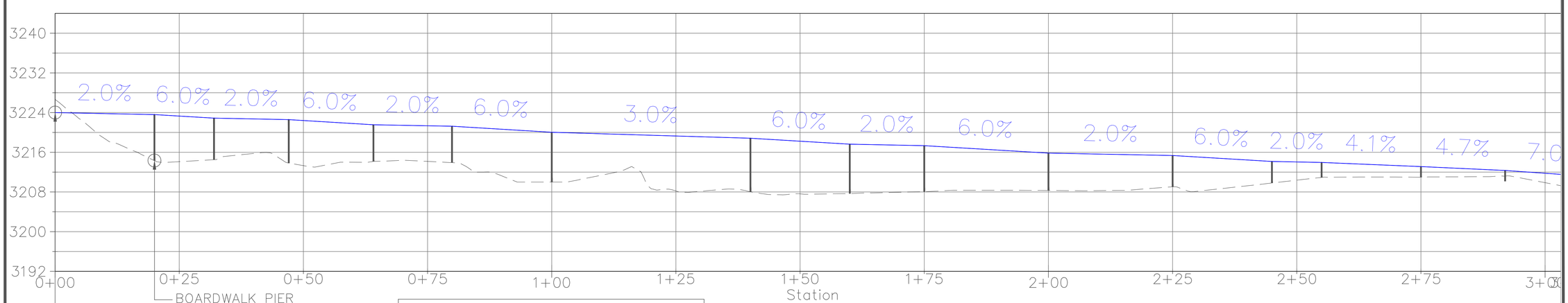

BOARDWALK PIER
SEE BOARDWALK STRUCTURAL PLANS BY ARETE (TYP)

BOARDWALK TIE–IN 3224', STA 0+00

SEE BOARDWALK STRUCTURAL PLANS BY ARETE ENGINEERS

IEC

WARREN CONSULTING & DESIGN, PLLC
850 9th Ave NW HICKORY, NC P–1005

NORTH CAROLINA PROFESSIONAL ENGINEER SEAL 036380 WARREN PATRICK 4/17/24

REVISIONS DATE

PREPARED FOR: BLUE RIDGE CONSERVANCY

BOONE GORGE PARK

TRAIL SECTION 2A BOARDWALK STA 0+00–3+00

MIDDLE FORK GREENWAY

WATAUGA COUNTY, NC

SCALE: 1"=10'

SHEET C2.1

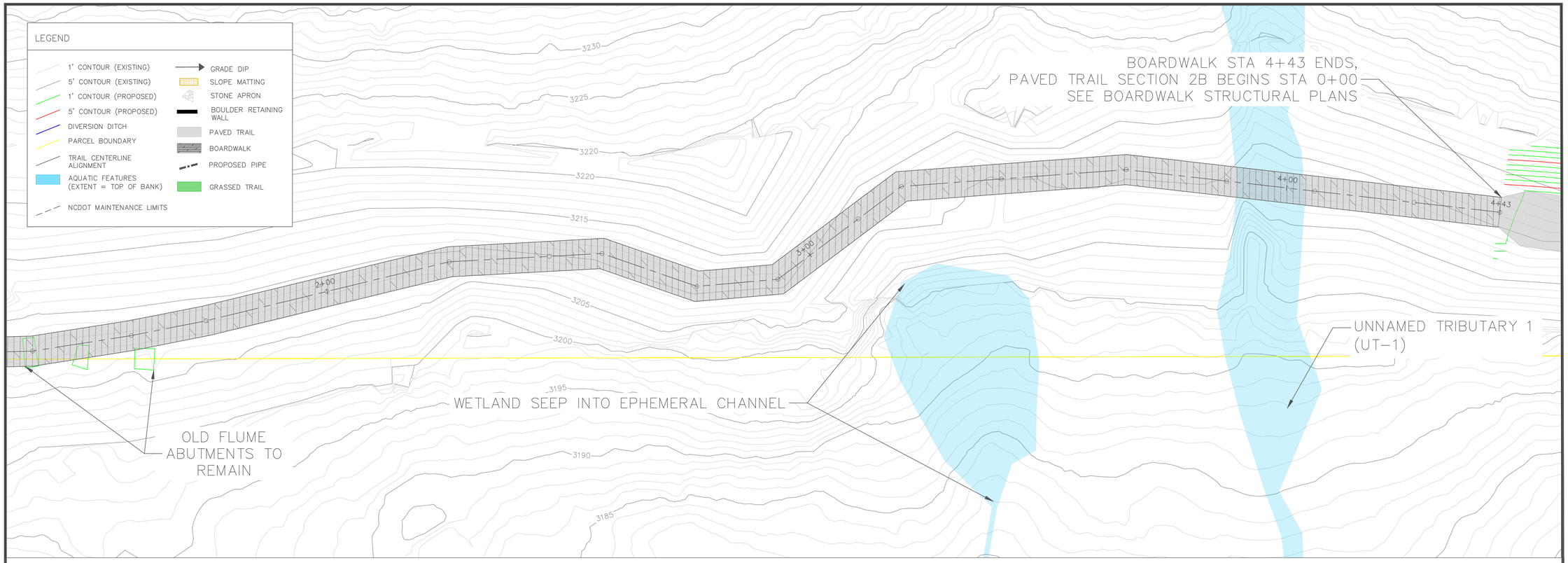

NOTES:
1. SEE DETAIL SHEET 6.1–6.5 FOR PAVED TRAIL/SHOULDER/SLOPE SPECIFICATIONS PER TRAIL SECTION.

SEE BOARDWALK STRUCTURAL PLANS BY ARETE ENGINEERS

TRAIL 2a BOARDWALK
STA 3+05 – 4+43

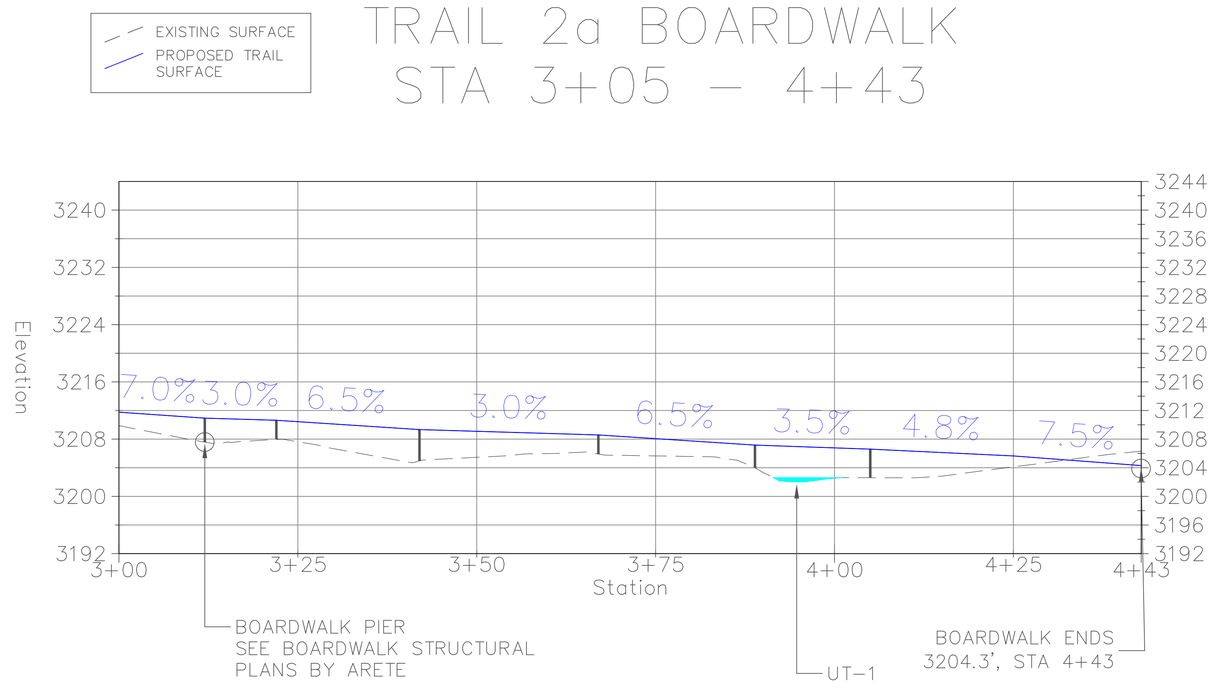

IEC

WARREN CONSULTING & DESIGN, PLLC
850 9th Ave NW HICKORY, NC P-1005

NORTH CAROLINA PROFESSIONAL SEAL 036390 ENGINEER PATRICK WARREN 4/17/25

REVISIONS DATE

PREPARED FOR: BLUE RIDGE CONSERVANCY

BOONE GORGE PARK

TRAIL SECTION 2A BOARDWALK STA 3+00–4+43

MIDDLE FORK GREENWAY

WATAUGA COUNTY, NC

SCALE: 1"=10'

SHEET C2.2

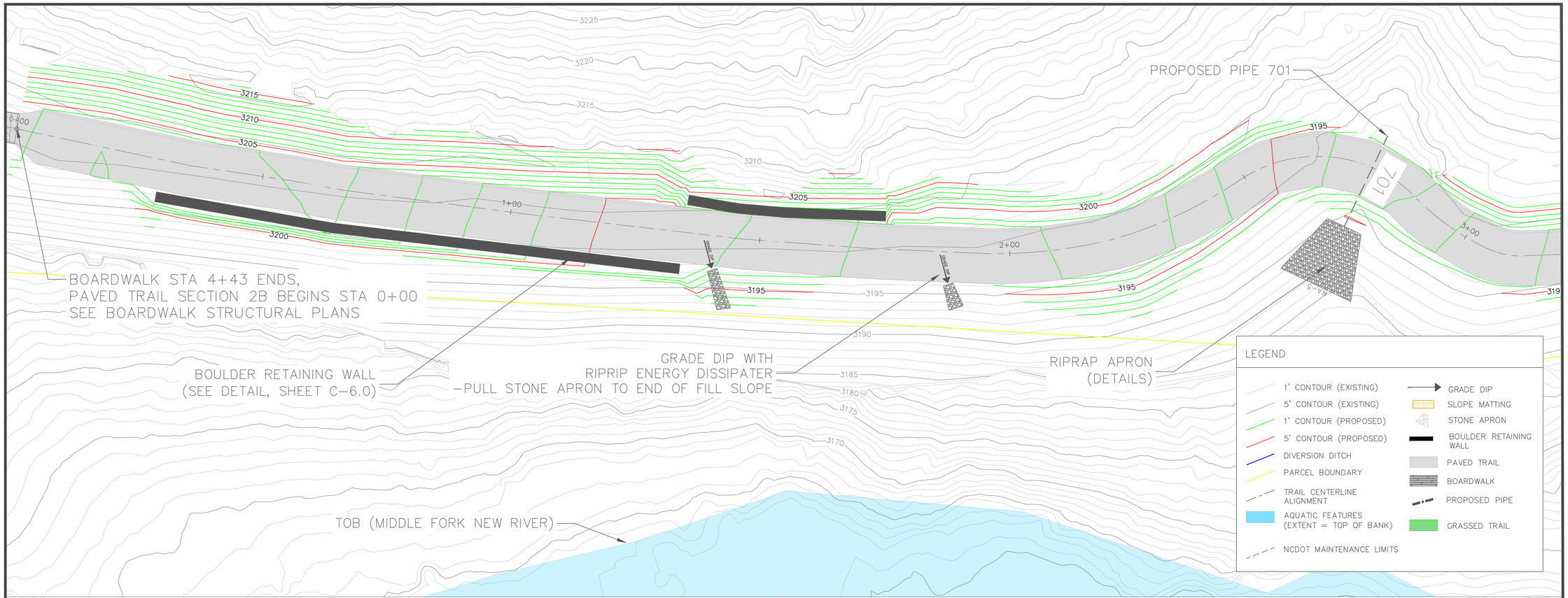

NOTES:
1. SEE DETAIL SHEET 6.1-6.5 FOR PAVED TRAIL/SHOULDER/SLOPE SPECIFICATIONS PER TRAIL SECTION.

Trail Alignment 2B
STA 0+00-3+01

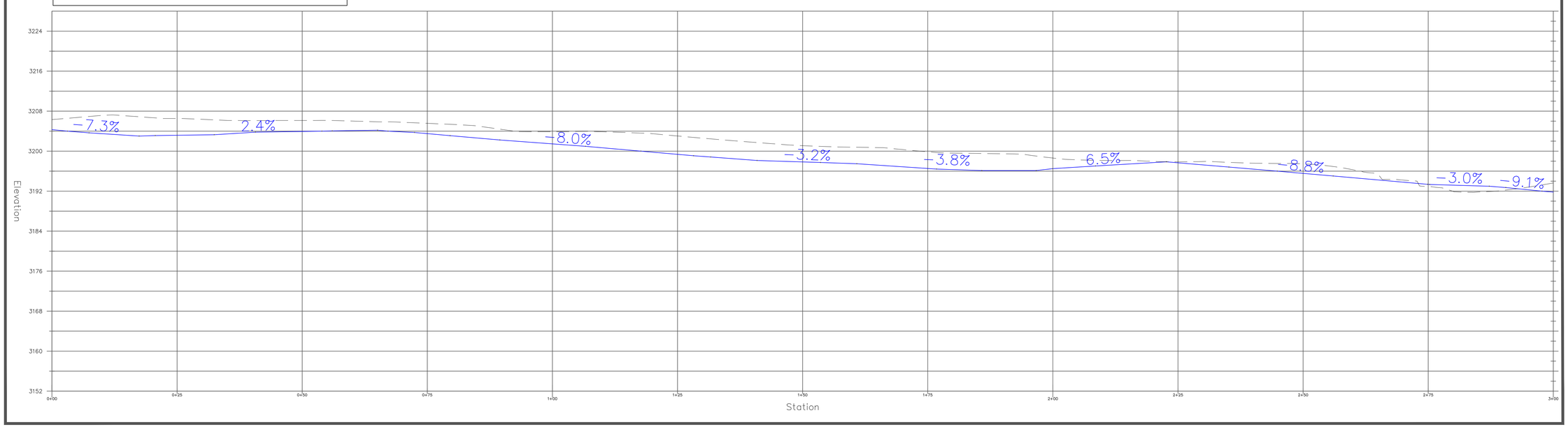

IEC

WARREN CONSULTING & DESIGN, PLLC
850 9th Ave NW HICKORY, NC P-1005

REVISIONS DATE

PREPARED FOR: BLUE RIDGE CONSERVANCY

BOONE GORGE PARK

TRAIL SECTION 2B STA 0+00-3+00

MIDDLE FORK GREENWAY
WATAUGA COUNTY, NC

SCALE: 1"=10'

SHEET C2.3

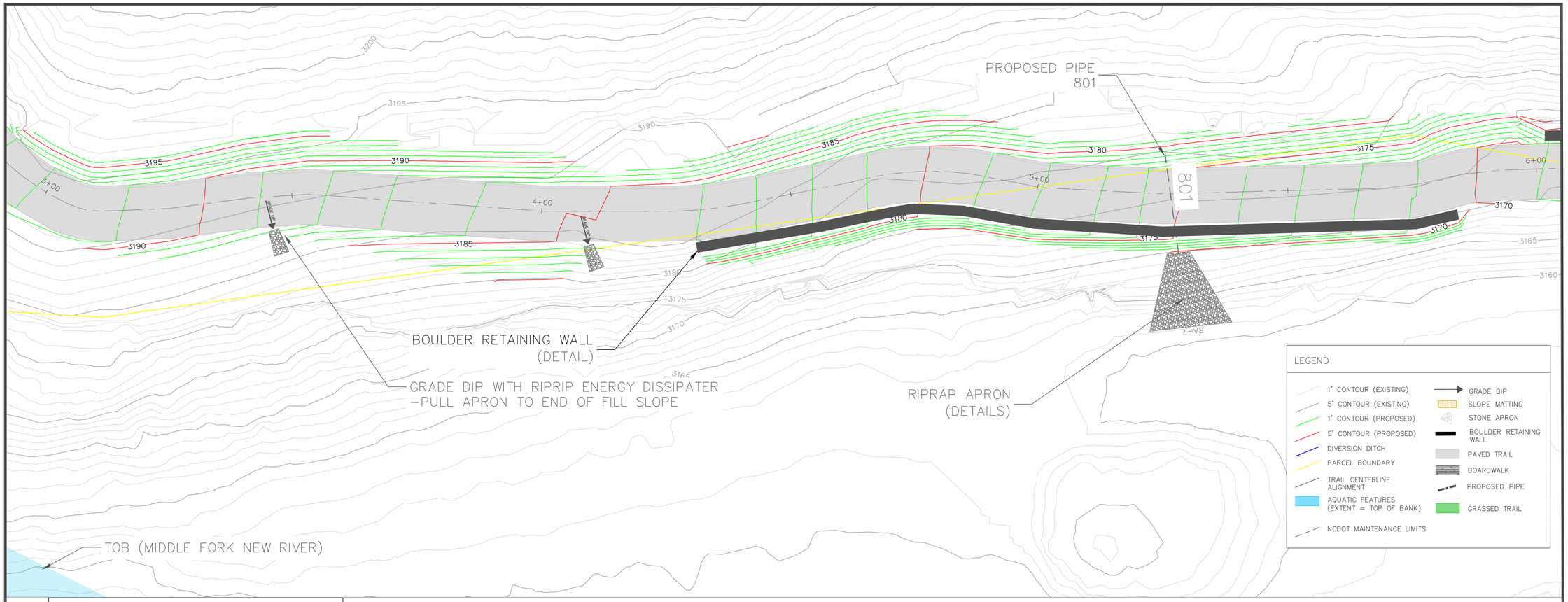

NOTES:
1. SEE DETAIL SHEET 6.1–6.5 FOR PAVED TRAIL/SHOULDER/SLOPE SPECIFICATIONS PER TRAIL SECTION.

Trail Alignment 2B
STA 3+01–6+00

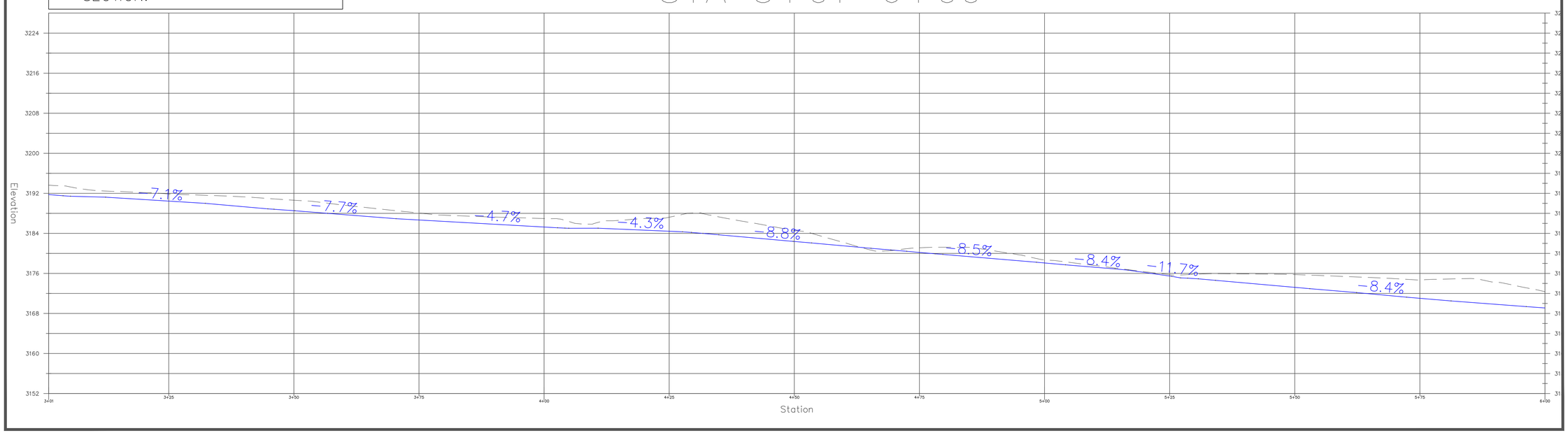

IEC

WARREN CONSULTING & DESIGN, PLLC
850 9th Ave NW HICKORY, NC P–1005

NORTH CAROLINA PROFESSIONAL SEAL 036390 ENGINEER WARREN PATRICK STEWART 4/19/22

REVISIONS DATE

PREPARED FOR: BLUE RIDGE CONSERVANCY

BOONE GORGE PARK

TRAIL SECTION 2B STA 3+01–6+00

MIDDLE FORK GREENWAY

WATAUGA COUNTY, NC

SCALE: 1" = 10'

SHEET C2.4

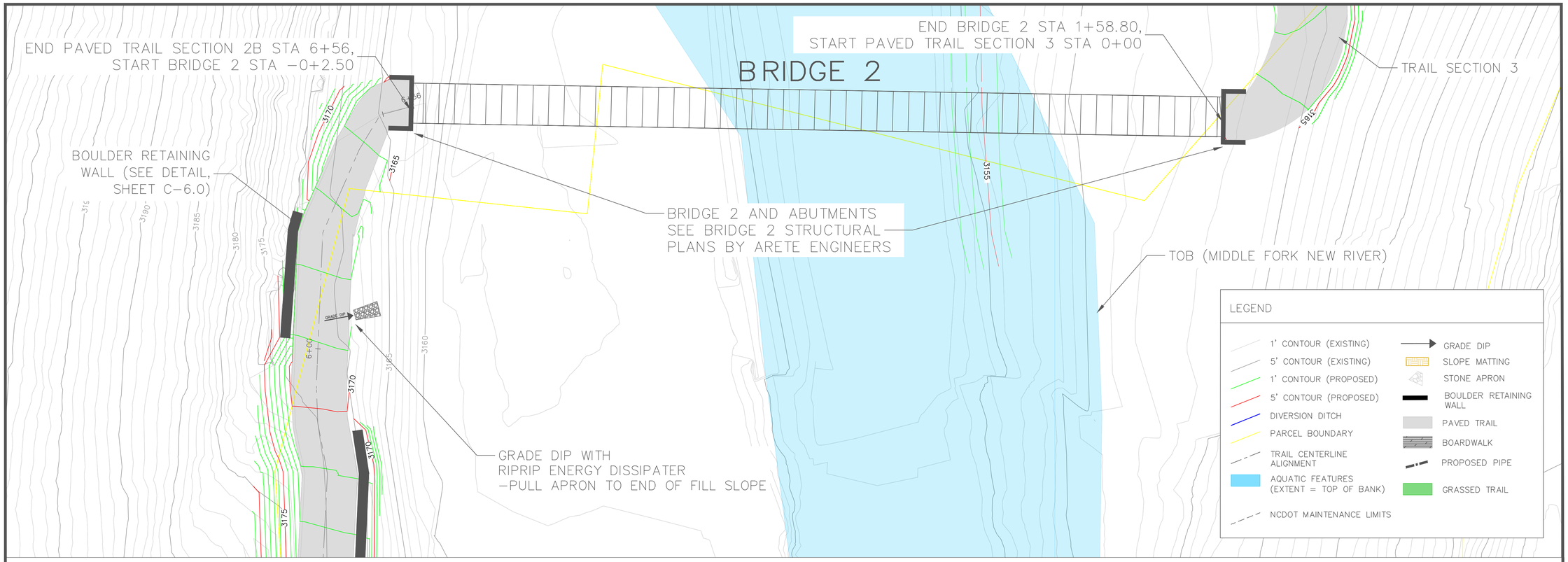

EXISTING SURFACE
PROPOSED TRAIL SURFACE

Trail Alignment 2B
STA 6+01–6+56

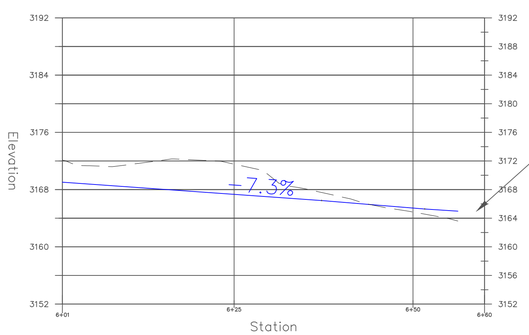

Asphalt Trail to Intercept Bridge Deck at Pedestrian Bridge #2. Deck Elevation 3165.09'.

NOTES:
1. SEE DETAIL SHEET 6.1–6.5 FOR PAVED TRAIL/SHOULDER/SLOPE SPECIFICATIONS PER TRAIL SECTION.

SEE BRIDGE 1 STRUCTURAL PLANS BY ARETE ENGINEERS FOR TIE–IN

IEC

WARREN CONSULTING & DESIGN, PLLC
850 9th Ave NW HICKORY, NC P-1005

NORTH CAROLINA PROFESSIONAL SEAL 045390 ENGINEER WARREN PATRICK 4/17/25

REVISIONS DATE

PREPARED FOR: BLUE RIDGE CONSERVANCY

BOONE GORGE PARK
TRAIL SECTION 2B STA 6+01–6+56
MIDDLE FORK GREENWAY
WATAUGA COUNTY, NC

SCALE: 1"=10'

SHEET C2.5

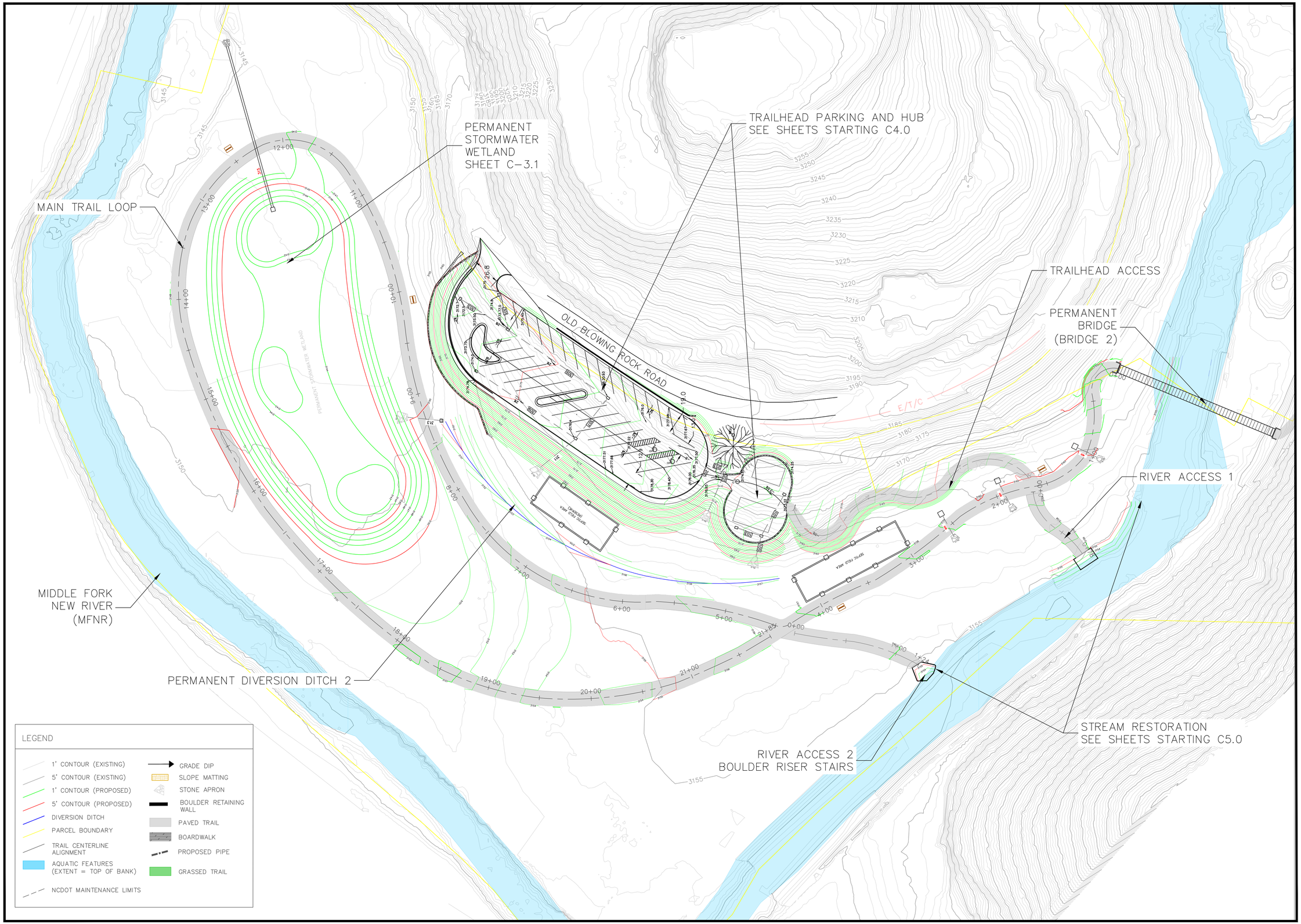

IEC

WARREN CONSULTING & DESIGN, PLLC
850 9th Ave NW HICKORY, NC P-1005

CAROLINA HUNTER WARREN
PROFESSIONAL ENGINEER SEAL 036364
PATRICK
4/4/25

REVISIONS | DATE

PREPARED FOR: BLUE RIDGE CONSERVANCY

BOONE GORGE PARK
TRAIL SECTION 3 – OVERALL
MIDDLE FORK GREENWAY
WATAUGA COUNTY, NC

SCALE: 1"=40'

SHEET C3.0

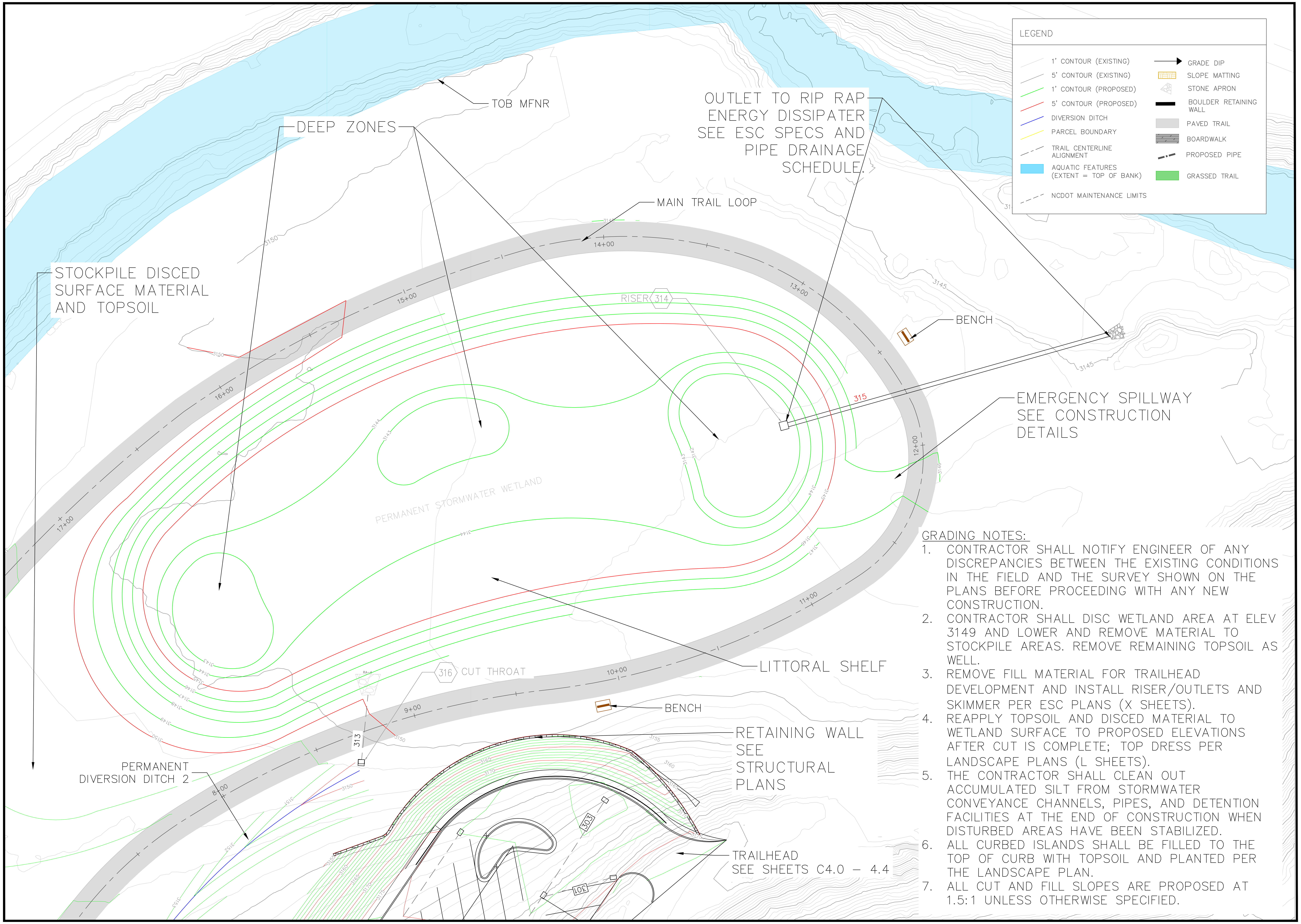

GRADING NOTES:

1. CONTRACTOR SHALL NOTIFY ENGINEER OF ANY DISCREPANCIES BETWEEN THE EXISTING CONDITIONS IN THE FIELD AND THE SURVEY SHOWN ON THE PLANS BEFORE PROCEEDING WITH ANY NEW CONSTRUCTION.
2. CONTRACTOR SHALL DISC WETLAND AREA AT ELEV 3149 AND LOWER AND REMOVE MATERIAL TO STOCKPILE AREAS. REMOVE REMAINING TOPSOIL AS WELL.
3. REMOVE FILL MATERIAL FOR TRAILHEAD DEVELOPMENT AND INSTALL RISER/OUTLETS AND SKIMMER PER ESC PLANS (X SHEETS).
4. REAPPLY TOPSOIL AND DISCED MATERIAL TO WETLAND SURFACE TO PROPOSED ELEVATIONS AFTER CUT IS COMPLETE; TOP DRESS PER LANDSCAPE PLANS (L SHEETS).
5. THE CONTRACTOR SHALL CLEAN OUT ACCUMULATED SILT FROM STORMWATER CONVEYANCE CHANNELS, PIPES, AND DETENTION FACILITIES AT THE END OF CONSTRUCTION WHEN DISTURBED AREAS HAVE BEEN STABILIZED.
6. ALL CURBED ISLANDS SHALL BE FILLED TO THE TOP OF CURB WITH TOPSOIL AND PLANTED PER THE LANDSCAPE PLAN.
7. ALL CUT AND FILL SLOPES ARE PROPOSED AT 1.5:1 UNLESS OTHERWISE SPECIFIED.

IEC

WARREN CONSULTING & DESIGN, PLLC
850 9th Ave NW HICKORY, NC P-1005

NORTH CAROLINA PROFESSIONAL ENGINEER SEAL 039380 PATRICK WARREN

REVISIONS | DATE

PREPARED FOR: BLUE RIDGE CONSERVANCY

BOONE GORGE PARK
TRAIL SECTION 3 – POND
MIDDLE FORK GREENWAY
WATAUGA COUNTY, NC

SCALE: 1"=20'

SHEET C3.1

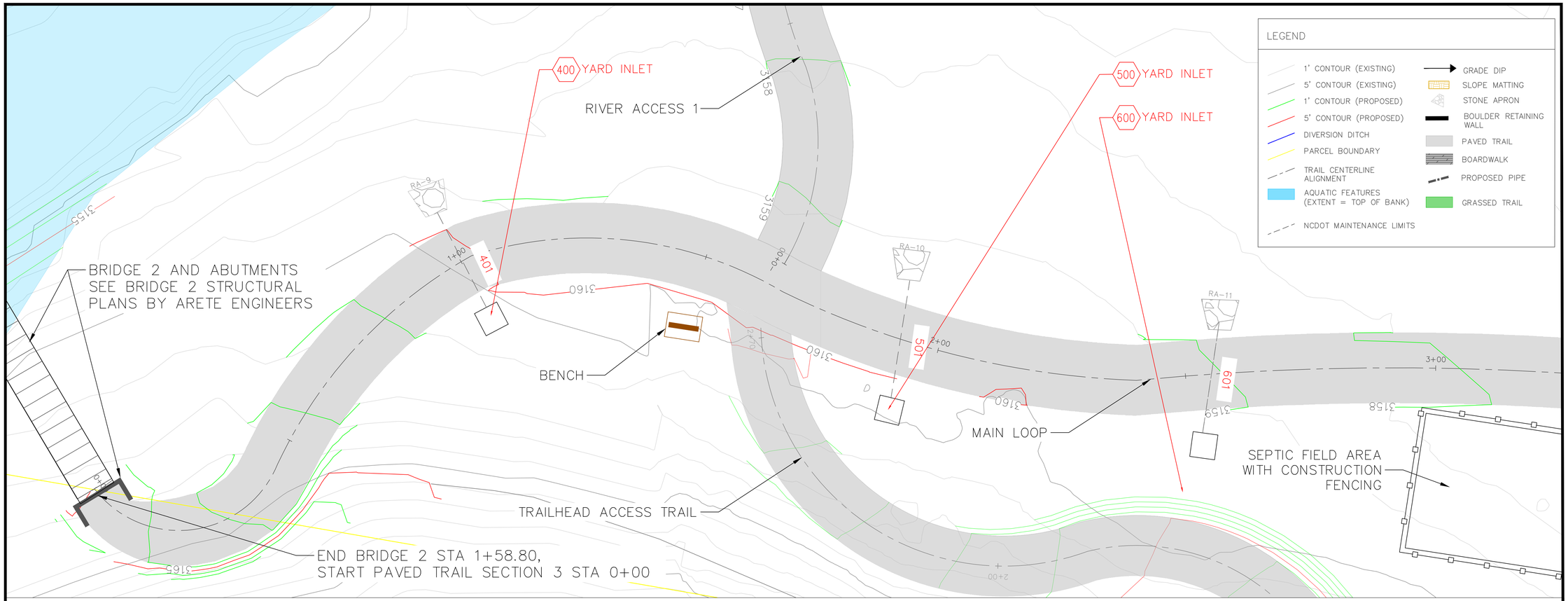

NOTES:
1. SEE DETAIL SHEET 6.1–6.5 FOR PAVED TRAIL/SHOULDER/SLOPE SPECIFICATIONS PER TRAIL SECTION.

EXISTING SURFACE
PROPOSED TRAIL SURFACE

TRAIL ALIGNMENT 3
STA 0+00–3+00

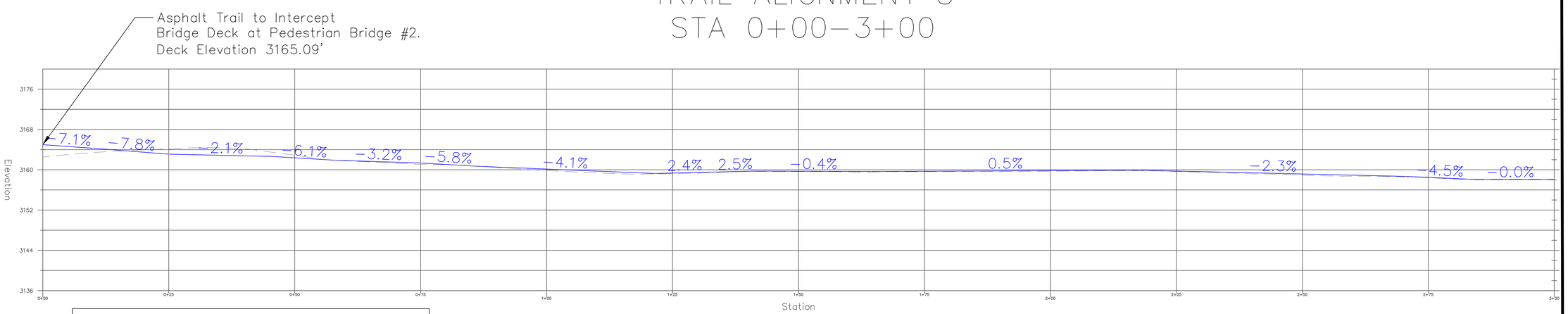

SEE BRIDGE 1 STRUCTURAL PLANS BY ARETE ENGINEERS FOR TIE–IN

IEC

WARREN CONSULTING & DESIGN, PLLC
850 9th Ave NW HICKORY, NC P–1005

NORTH CAROLINA PROFESSIONAL SEAL ENGINEER PATRICK WARREN 047725

REVISIONS | DATE

PREPARED FOR: BLUE RIDGE CONSERVANCY

BOONE GORGE PARK
TRAIL SECTION 3 – MAIN LOOP
STA 0+00–3+00
MIDDLE FORK GREENWAY
WATAUGA COUNTY, NC

SCALE: 1"=10'

SHEET C3.2

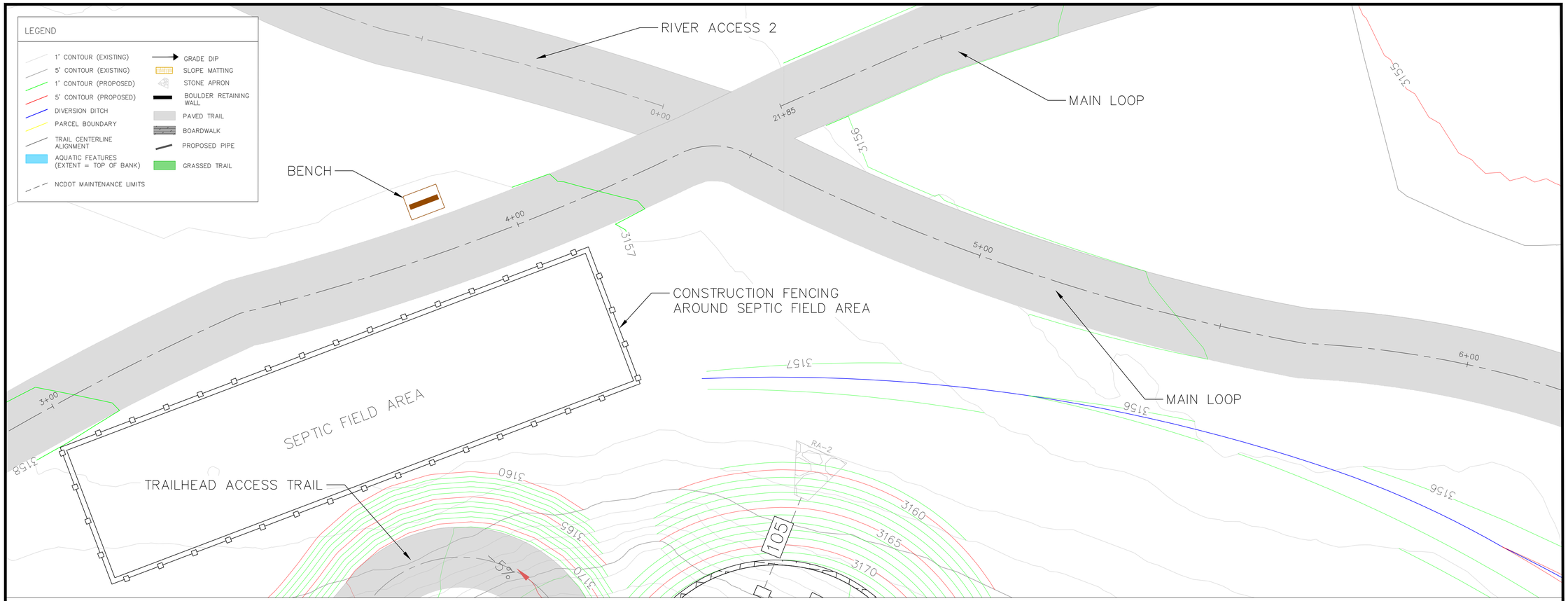

EXISTING SURFACE

PROPOSED TRAIL SURFACE

TRAIL ALIGNMENT 3
STA 3+01–6+00

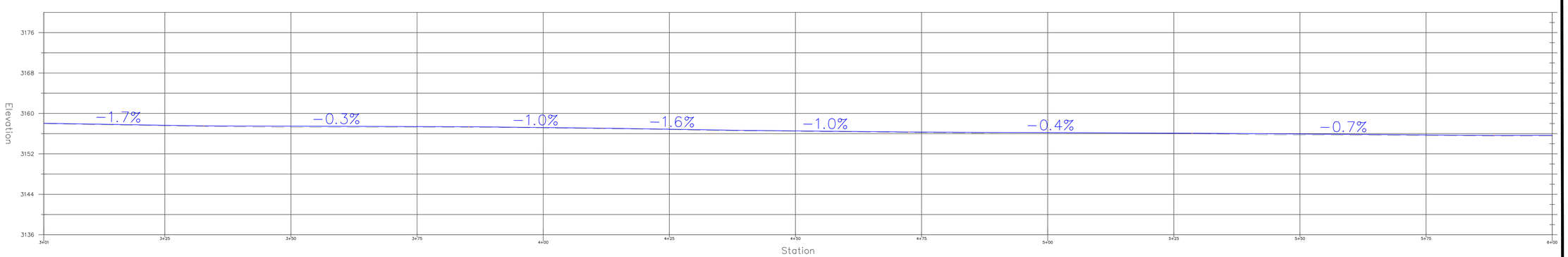

IEC

WARREN CONSULTING & DESIGN, PLLC
850 9th Ave NW HICKORY, NC P-1005

NORTH CAROLINA PROFESSIONAL SEAL 047125 ENGINEER PATRICK WARREN
4/14/25

REVISIONS DATE

PREPARED FOR: BLUE RIDGE CONSERVANCY

BOONE GORGE PARK
TRAIL SECTION 3 – MAIN LOOP
STA 3+01–6+00
MIDDLE FORK GREENWAY
WATAUGA COUNTY, NC

SCALE: 1"=10'

SHEET
C3.3

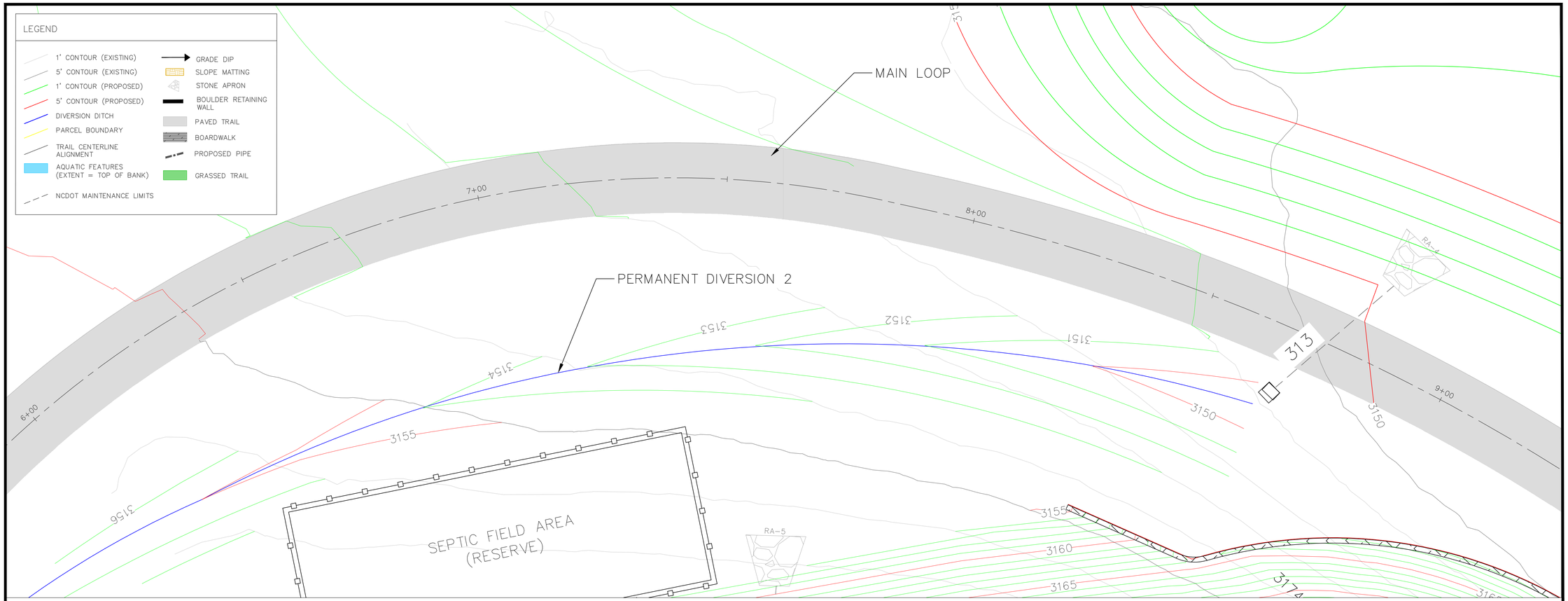

EXISTING SURFACE

PROPOSED TRAIL SURFACE

TRAIL ALIGNMENT 3
STA 6+01–9+00

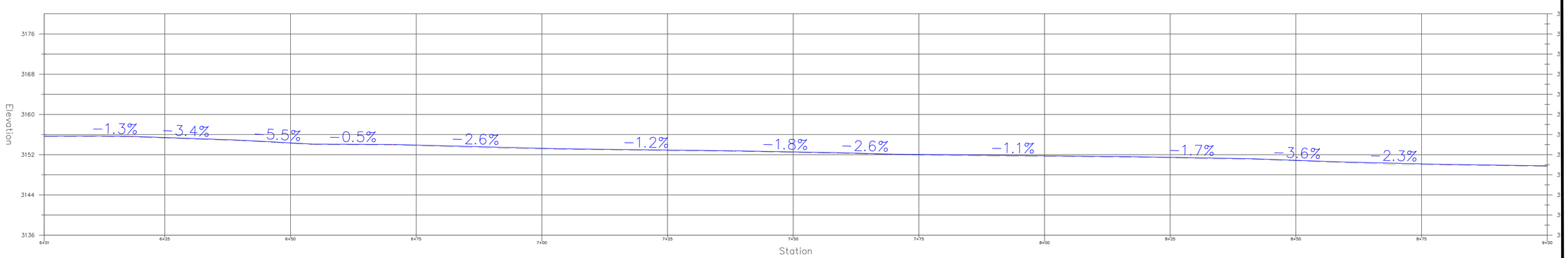

IEC

WARREN CONSULTING & DESIGN, PLLC
850 9th Ave NW HICKORY, NC P-1005

REVISIONS | DATE

PREPARED FOR: BLUE RIDGE CONSERVANCY

BOONE GORGE PARK
TRAIL SECTION 3 – MAIN LOOP
STA 6+01–9+00
MIDDLE FORK GREENWAY
WATAUGA COUNTY, NC

SCALE: 1"=10'

SHEET C3.4

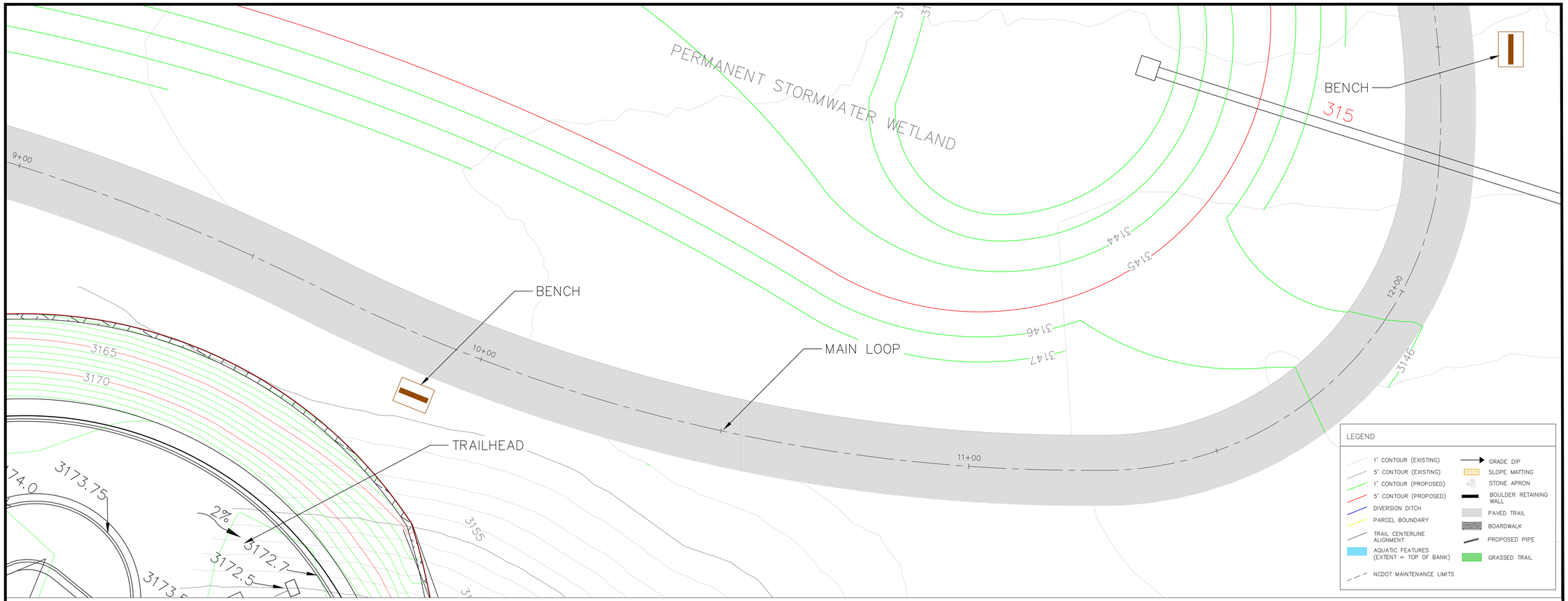

EXISTING SURFACE

PROPOSED TRAIL SURFACE

TRAIL ALIGNMENT 3
STA 9+01–12+25

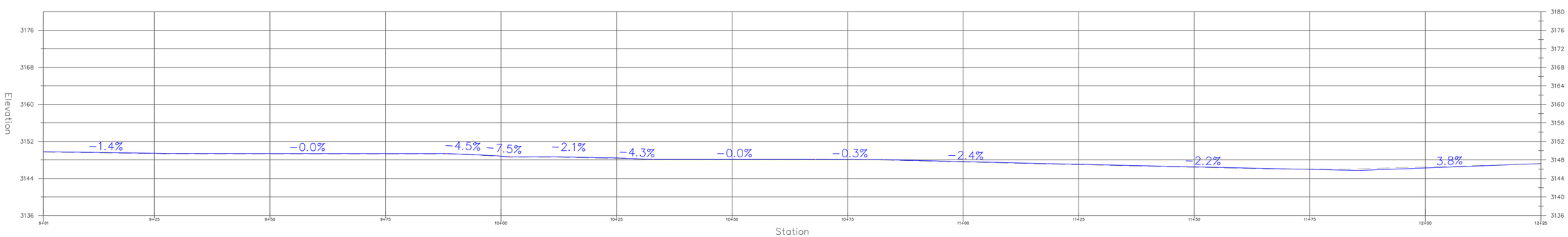

IEC

WARREN CONSULTING & DESIGN, PLLC
850 9th Ave NW HICKORY, NC P-1005

NORTH CAROLINA PROFESSIONAL SEAL ENGINEER PATRICK WARREN 4/14/25

REVISIONS | DATE

PREPARED FOR: BLUE RIDGE CONSERVANCY

BOONE GORGE PARK
TRAIL SECTION 3 – MAIN LOOP
STA 9+01–12+25
MIDDLE FORK GREENWAY
WATAUGA COUNTY, NC

SCALE: 1"=10'

SHEET C3.5

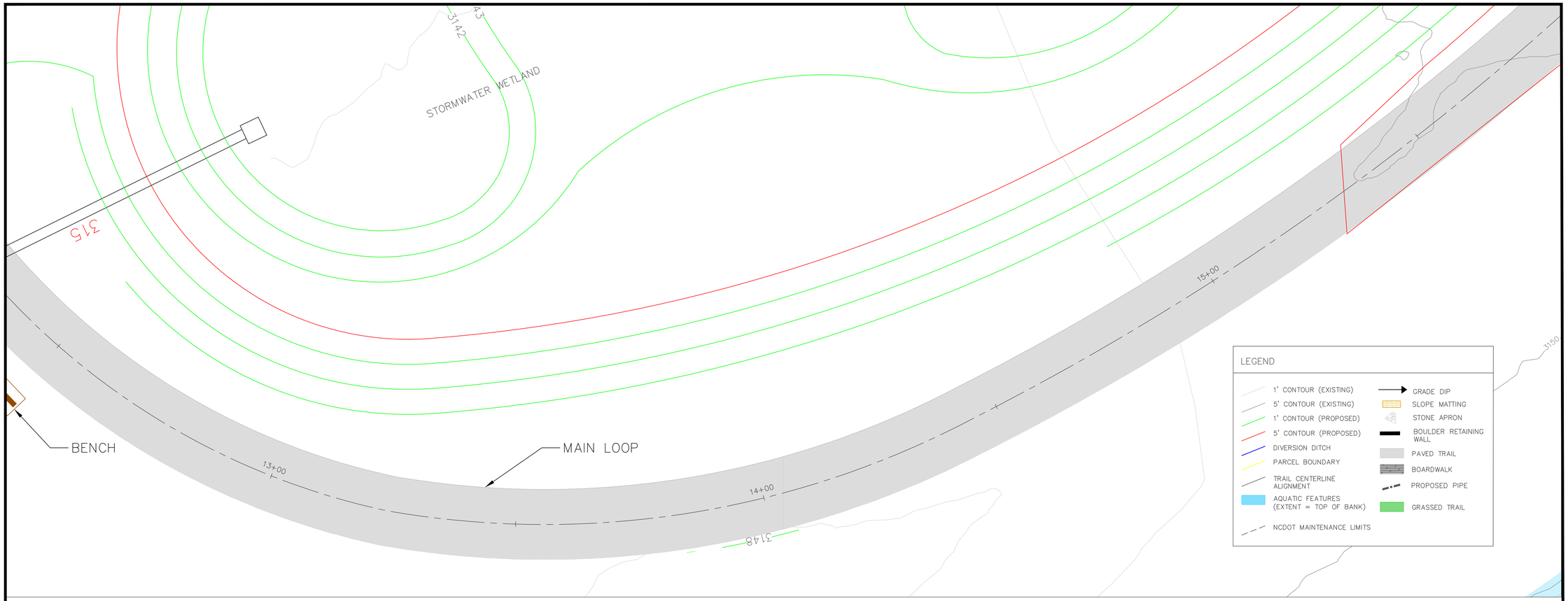

EXISTING SURFACE

PROPOSED TRAIL SURFACE

TRAIL ALIGNMENT 3
STA 12+26–15+50

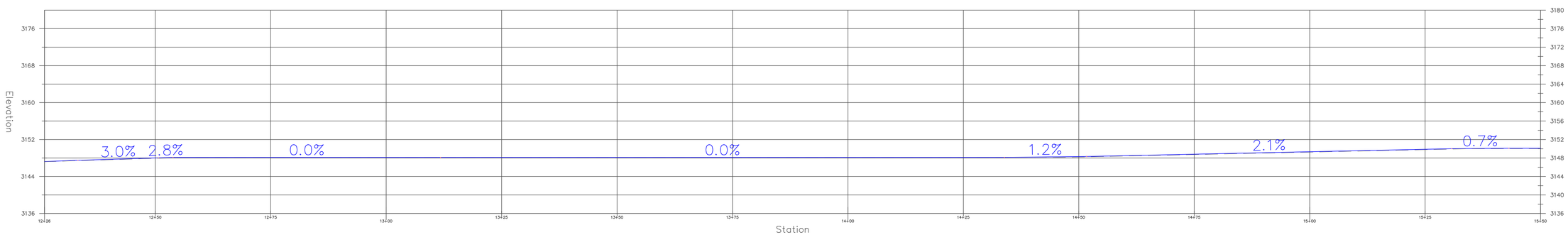

IEC

WARREN CONSULTING & DESIGN, PLLC
850 9th Ave NW HICKORY, NC P-1005

CAROLINA PROFESSIONAL SEAL ENGINEER PATRICK WARREN 047425

REVISIONS DATE

PREPARED FOR: BLUE RIDGE CONSERVANCY

BOONE GORGE PARK
TRAIL SECTION 3 – MAIN LOOP
STA 12+26–15+50
MIDDLE FORK GREENWAY
WATAUGA COUNTY, NC

N S E W

SCALE: 1"=10'

0 10 20 Feet

SHEET
C3.6

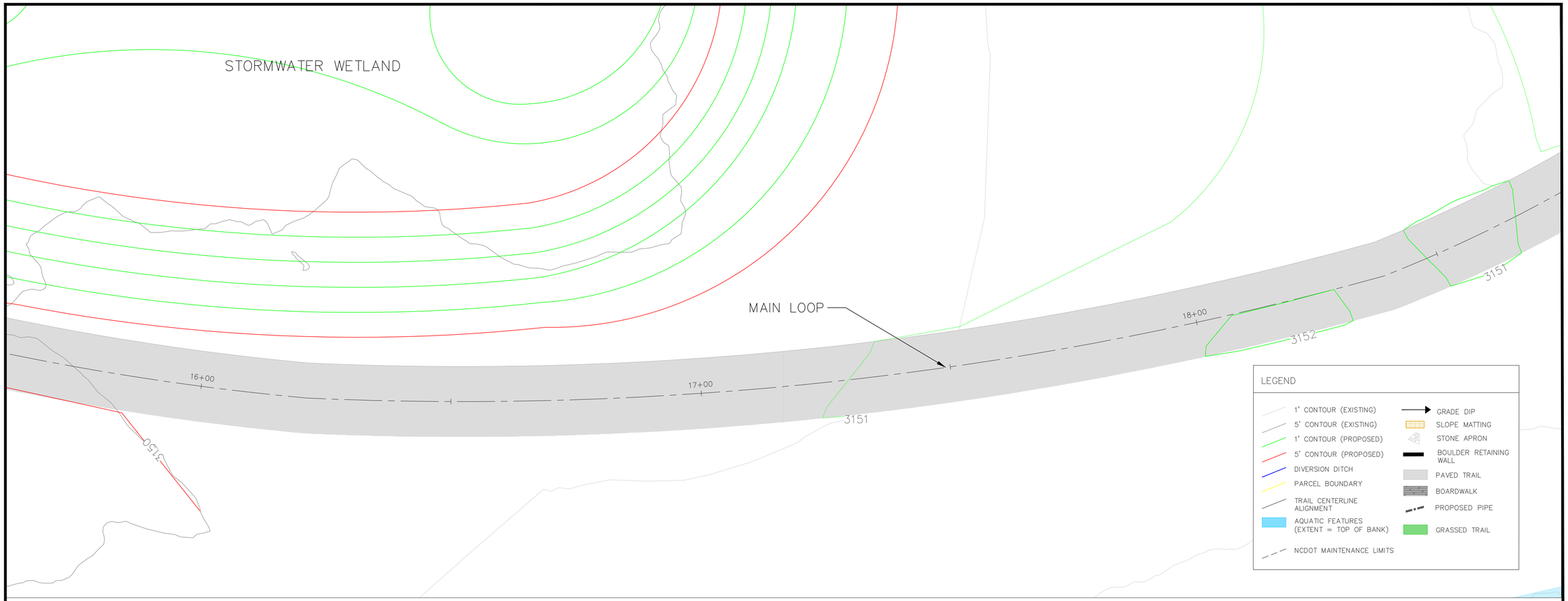

EXISTING SURFACE
PROPOSED TRAIL SURFACE

TRAIL ALIGNMENT 3
STA 15+51–18+50

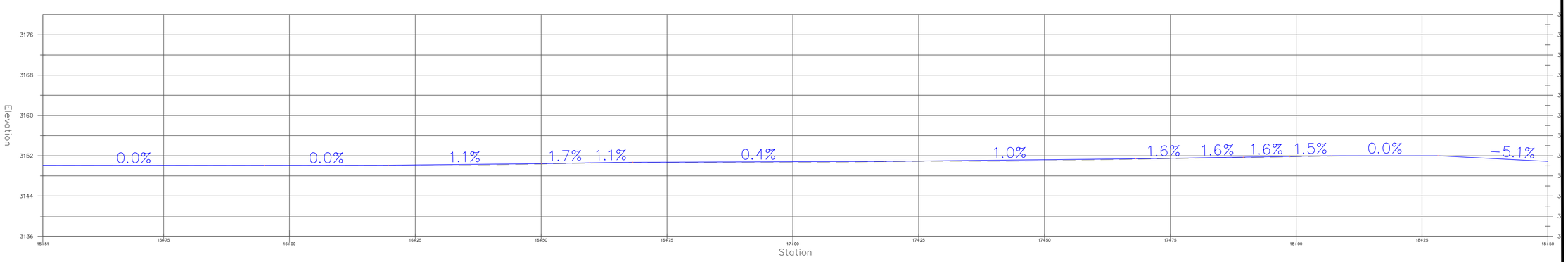

IEC

WARREN CONSULTING & DESIGN, PLLC
850 9th Ave NW HICKORY, NC P-1005

NORTH CAROLINA PROFESSIONAL SEAL 045361 ENGINEER PATRICK WARREN
4/14/25

REVISIONS DATE

PREPARED FOR: BLUE RIDGE CONSERVANCY

BOONE GORGE PARK
TRAIL SECTION 3 – MAIN LOOP
STA 15+51–18+50
MIDDLE FORK GREENWAY
WATAUGA COUNTY, NC

SCALE: 1"=10'

SHEET C3.7

EXISTING SURFACE
PROPOSED TRAIL SURFACE

TRAIL ALIGNMENT 3
STA 18+51–21+67

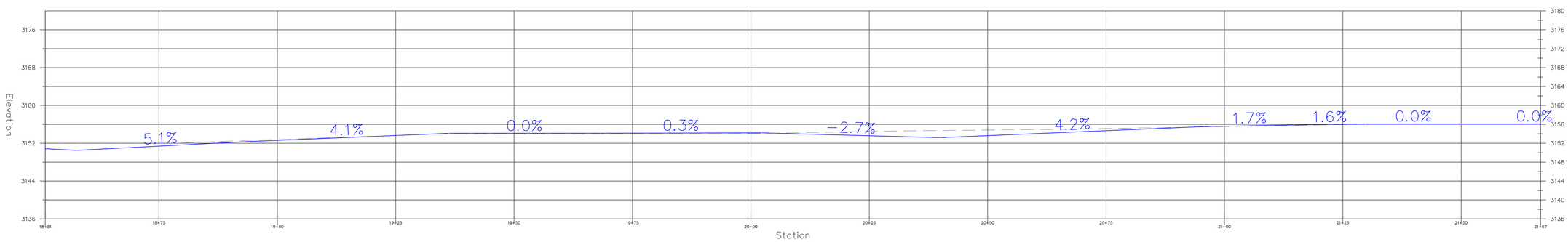

IEC

WARREN CONSULTING & DESIGN, PLLC
850 9th Ave NW HICKORY, NC P-1005

NORTH CAROLINA PROFESSIONAL SEAL 050391 ENGINEER PATRICK WARREN
4/14/25

REVISIONS DATE

PREPARED FOR: BLUE RIDGE CONSERVANCY

BOONE GORGE PARK
TRAIL SECTION 3 – MAIN LOOP
STA 18+50–21+67
MIDDLE FORK GREENWAY
WATAUGA COUNTY, NC

SCALE: 1"=10'

SHEET
C3.8

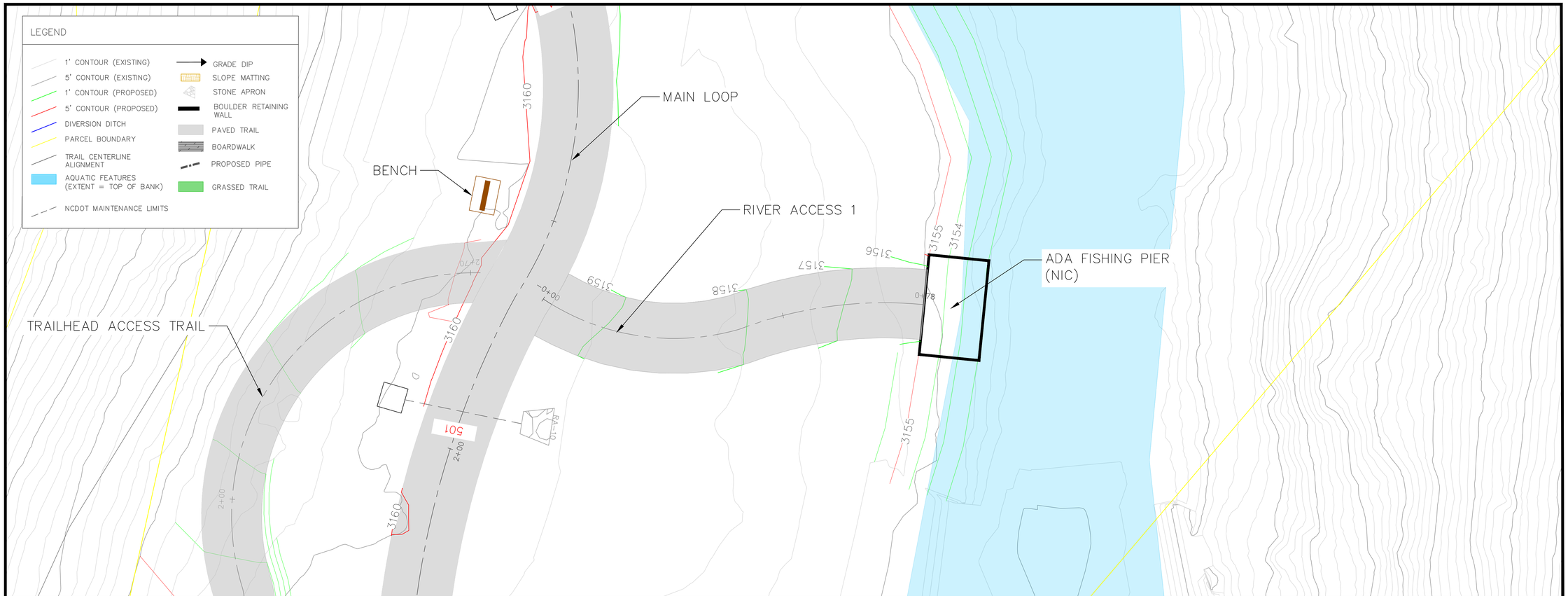

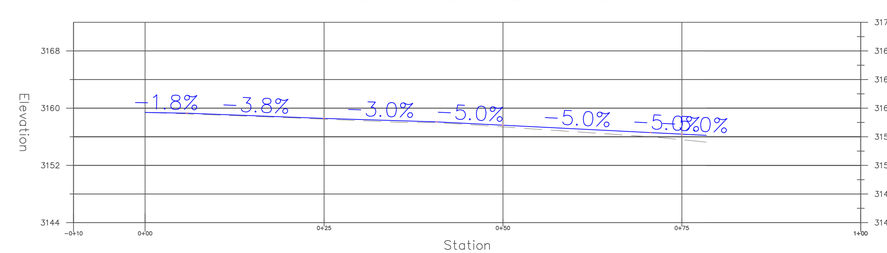

TRAIL ALIGNMENT – RIVER ACCESS 1
STA 0+00–0+78

IEC

WARREN CONSULTING & DESIGN, PLLC
850 9th Ave NW HICKORY, NC P-1005

NORTH CAROLINA PROFESSIONAL SEAL 045361 ENGINEER PATRICK WARREN
4/4/25

REVISIONS DATE

PREPARED FOR: BLUE RIDGE CONSERVANCY

BOONE GORGE PARK
TRAIL SECTION 3 – RIVER ACCESS 1 TRAIL
STA 0+00–0+78
MIDDLE FORK GREENWAY
WATAUGA COUNTY, NC

SCALE: 1"=10'

SHEET
C3.9

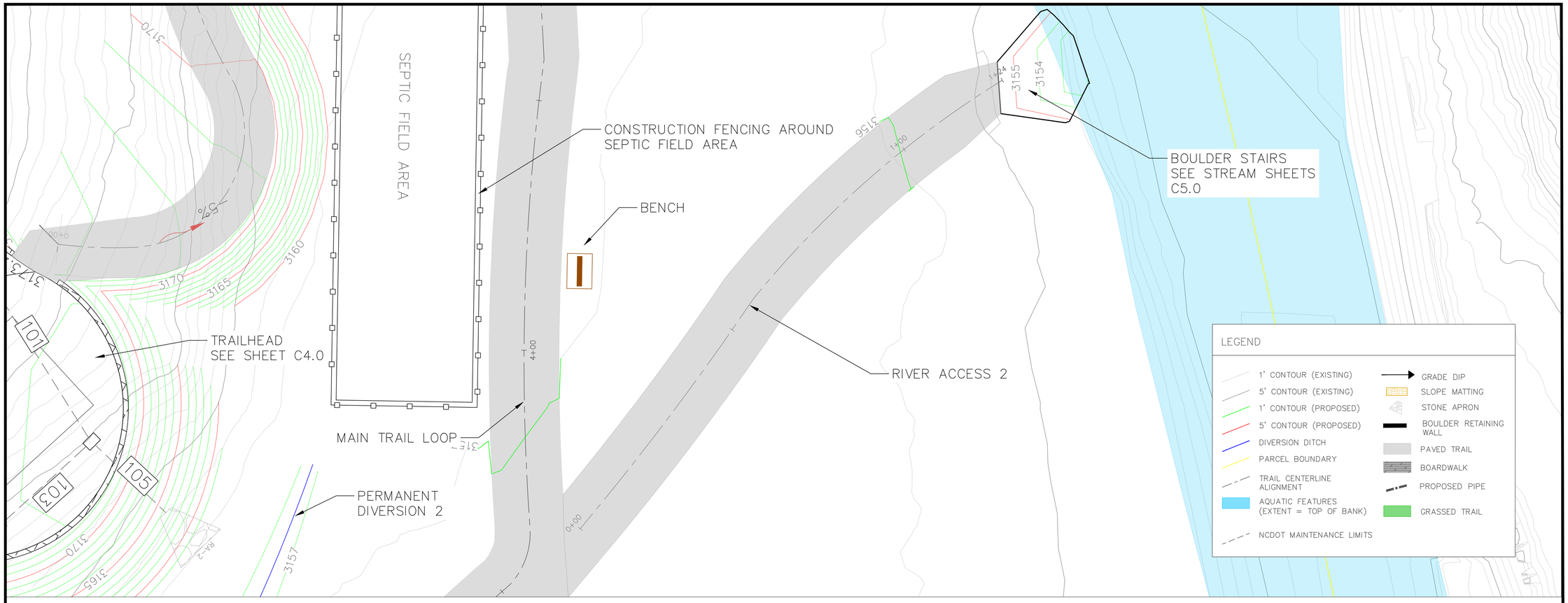

EXISTING SURFACE

PROPOSED TRAIL SURFACE

TRAIL ALIGNMENT–RIVER ACCESS 2
STA 0+00–1+24

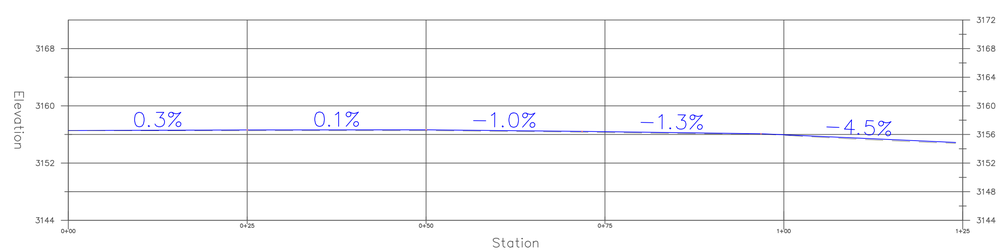

IEC

WARREN CONSULTING & DESIGN, PLLC
850 9th Ave NW HICKORY, NC P-1005

CAROLINA PROFESSIONAL SEAL 036361 ENGINEER PATRICK WARREN 4/14/25

REVISIONS DATE

PREPARED FOR: BLUE RIDGE CONSERVANCY

BOONE GORGE PARK

TRAIL SECTION 3 – RIVER ACCESS 1 TRAIL

STA 0+00–1+24

MIDDLE FORK GREENWAY

WATAUGA COUNTY, NC

SCALE: 1"=10'

SHEET C3.10

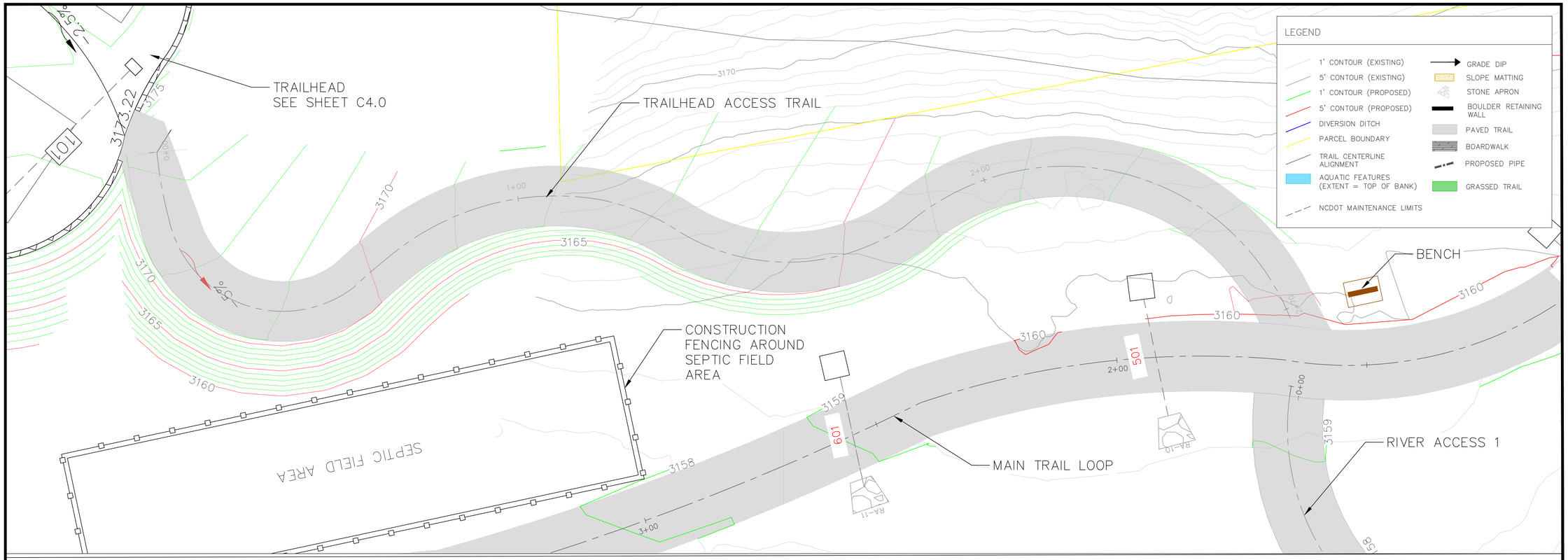

TRAIL ALIGNMENT – TRAILHEAD ACCESS
STA 0+00–2+72

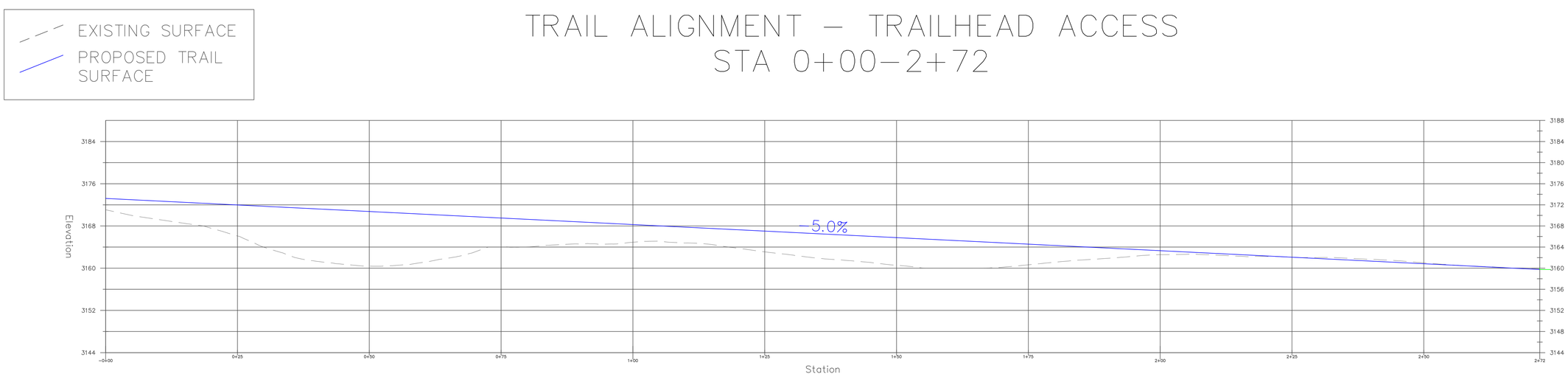

IEC

WARREN CONSULTING & DESIGN, PLLC
850 9th Ave NW HICKORY, NC P-1005

NORTH CAROLINA PROFESSIONAL SEAL 047725 ENGINEER PATRICK WARREN

REVISIONS DATE

PREPARED FOR: BLUE RIDGE CONSERVANCY

BOONE GORGE PARK
TRAIL SECTION 3 – TRAILHEAD ACCESS TRAIL
STA 0+00–2+71
MIDDLE FORK GREENWAY
WATAUGA COUNTY, NC

SCALE: 1"=10'

SHEET C3.11

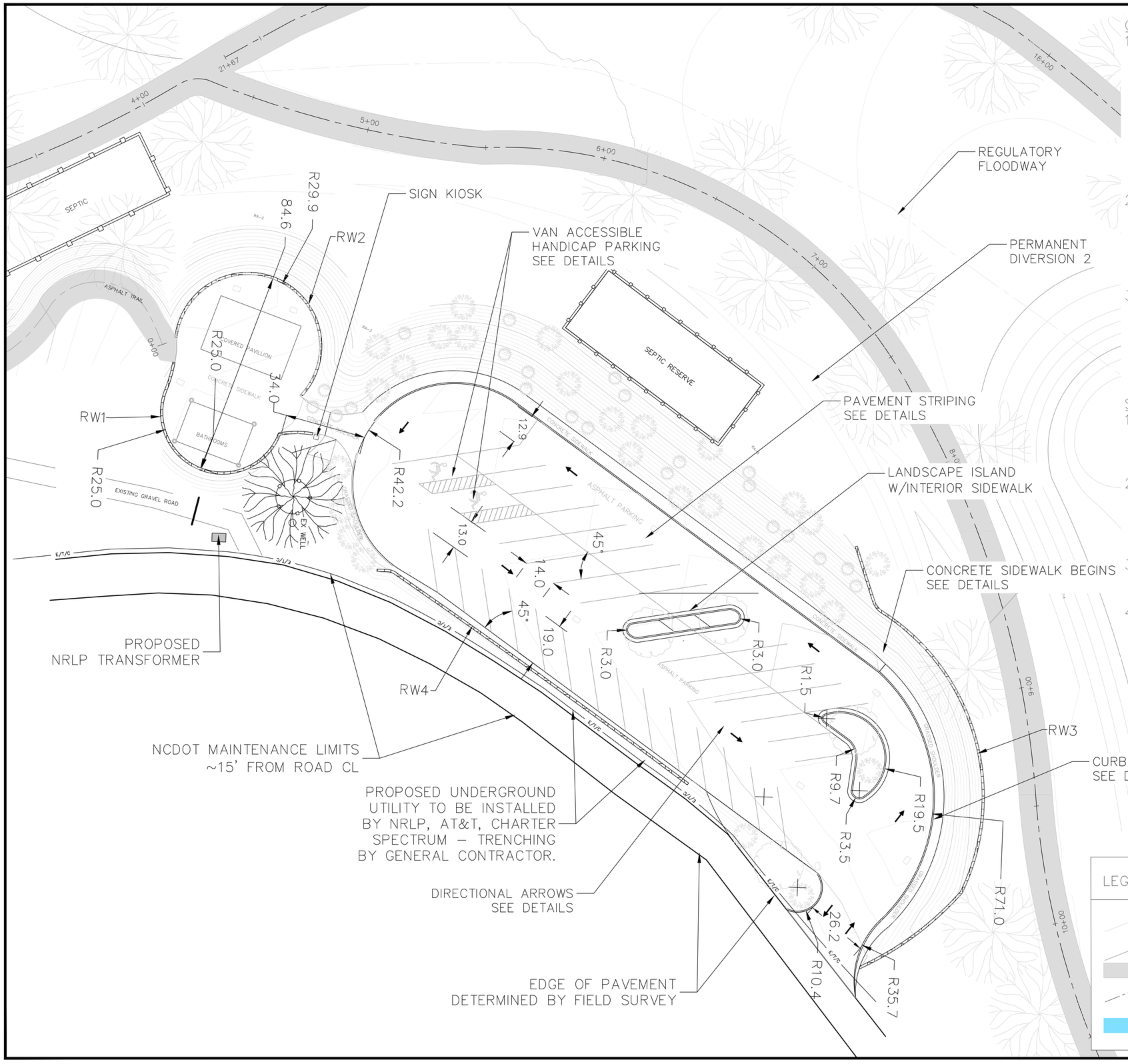

GENERAL NOTES:

1. ALL PROPOSED DIMENSIONS USED TO SHOW THE GEOMETRIC LAYOUT OF THE PROPOSED PARKING LOT ARE SHOWN AT THE FACE OF CURB. ALL PROPOSED DIMENSIONS USED TO SHOW THE GEOMETRIC LAYOUT OF THE PROPOSED BUILDING LOCATION ARE GIVEN AT THE OUTSIDE FACE OF THE BUILDING CORNERS. ALL CURB RADII ARE GIVEN AT THE FACE OF CURB.
2. CONTRACTOR SHALL NOTIFY ENGINEER OF ANY DISCREPANCIES BETWEEN THE EXISTING CONDITIONS IN THE FIELD AND THE SURVEY SHOWN ON THE PLANS BEFORE PROCEEDING WITH ANY NEW CONSTRUCTION.
3. CONTRACTOR IS RESPONSIBLE FOR CORRECT HORIZONTAL AND VERTICAL ALIGNMENT OF ALL TIES BETWEEN PROPOSED AND EXISTING PAVEMENTS, CURB AND GUTTER, SIDEWALKS, WALLS, AND UTILITIES.

SITE NOTES:

1. SEE ARCHITECTURAL PLANS FOR BUILDING FLOOR PLAN DIMENSIONS, DOOR LOCATIONS, AND OTHER ARCHITECTURAL DETAILS.
2. ALL TREE SAVE AREAS AND UNDISTURBED AREAS SHALL BE CLEARLY IDENTIFIED BY FLAGGING AND/OR FENCING PRIOR TO COMMENCEMENT OF ANY LAND DISTURBANCE.
3. ALL EROSION AND SEDIMENT CONTROL AND TREE PROTECTIONS MEASURES SHALL BE INSTALLED PRIOR TO ANY GRADING.
4. THE OWNER IS SOLELY RESPONSIBLE FOR COMPLIANCE WITH THE AMERICANS WITH DISABILITIES ACT (ADA)

IEC

WARREN CONSULTING & DESIGN, PLLC
850 9th Ave NW HICKORY, NC P-1005

NORTH CAROLINA PROFESSIONAL SEAL 13390 ENGINEER PATRICK WARREN 4/17/24

REVISIONS	DATE

PREPARED FOR: BLUE RIDGE CONSERVANCY

BOONE GORGE PARK

TRAILHEAD – DIMENSIONED SITE PLAN

MIDDLE FORK GREENWAY
WATAUGA COUNTY, NC

SCALE: 1"=20'

SHEET C4.0

RADING NOTES:

1. CONTRACTOR SHALL NOTIFY ENGINEER OF ANY DISCREPANCIES BETWEEN THE EXISTING CONDITIONS IN THE FIELD AND THE SURVEY SHOWN ON THE PLANS BEFORE PROCEEDING WITH ANY NEW CONSTRUCTION.
2. CONTRACTOR IS RESPONSIBLE FOR CORRECT HORIZONTAL AND VERTICAL ALIGNMENT OF ALL TIES BETWEEN PROPOSED AND EXISTING PAVEMENTS, CURB AND GUTTER, SIDEWALKS, WALLS, AND UTILITIES.
3. ALL PROPOSED CONTOURS AND SPOT ELEVATIONS ARE GIVEN TO FINISHED SURFACE OF GROUND OR HARD STRUCTURE.
4. ALL SIDEWALKS SHALL BE BUILT WITH A 2% CROSSSLOPE.
5. THE CONTRACTOR SHALL CLEAN OUT ACCUMULATED SILT FROM STORMWATER CONVEYANCE CHANNELS, PIPES, AND DETENTION FACILITIES AT THE END OF CONSTRUCTION WHEN DISTURBED AREAS HAVE BEEN STABILIZED.
6. ALL CURBED ISLANDS SHALL BE FILLED TO THE TOP OF CURB WITH TOPSOIL AND PLANTED PER THE LANDSCAPE PLAN.
7. ALL CUT AND FILL SLOPES ARE PROPOSED AT 1.5:1 UNLESS OTHERWISE SPECIFIED.
8. IN ALL AREAS OF DISTURBANCE OF EXISTING CONDITIONS, UNLESS OTHERWISE NOTED, THE CONTRACTOR SHALL FULLY AND COMPLETELY REMOVE AND LEGALLY DISPOSE OF OFF–SITE, ALL PLANT MATERIALS INCLUDING BUT NOT LIMITED TO ROOT SYSTEMS, CONCRETE, ASPHALT DEBRIS, UNDERBRUSH, TOPSOIL, AND OTHER DELETERIOUS MATERIAL.
9. THE SUBGRADE SHALL BE COMPACTED TO 95% STANDARD PROCTOR MAXIMUM DRY DENSITY FOLLOWING FULL REMOVAL OF THESE MATERIALS.
10. "BC" DENOTES BOTTOM OF CURB ELEVATION; "TC" DENOTES TOP OF CURB ELEVATION.
11. ELEVATION PROPOSED AT BATHROOM STRUCTURE IS APPLIED TO BUILDING CORNERS.

LEGEND

- 1' CONTOUR (PROPOSED)
- 5' CONTOUR (PROPOSED)
- 5' CONTOURS (EXISTING)
- TRAIL CENTERLINE ALIGNMENT
- AQUATIC FEATURES (EXTENT = TOP OF BANK)
- FLOODWAY
- PAVED TRAIL
- PROPOSED PIPE
- STONE APRON
- RETAINING WALL
- UTILITY

IEC

WARREN CONSULTING & DESIGN, PLLC
850 9th Ave NW HICKORY, NC P-1005

NORTH CAROLINA PROFESSIONAL SEAL 030360 ENGINEER PATRICK M. WARREN 4/17/24

DATE

REVISIONS

PREPARED FOR: BLUE RIDGE CONSERVANCY

BOONE GORGE PARK

TRAILHEAD – GRADING PLAN

MIDDLE FORK GREENWAY
WATAUGA COUNTY, NC

SCALE: 1"=20'

SHEET C4.1

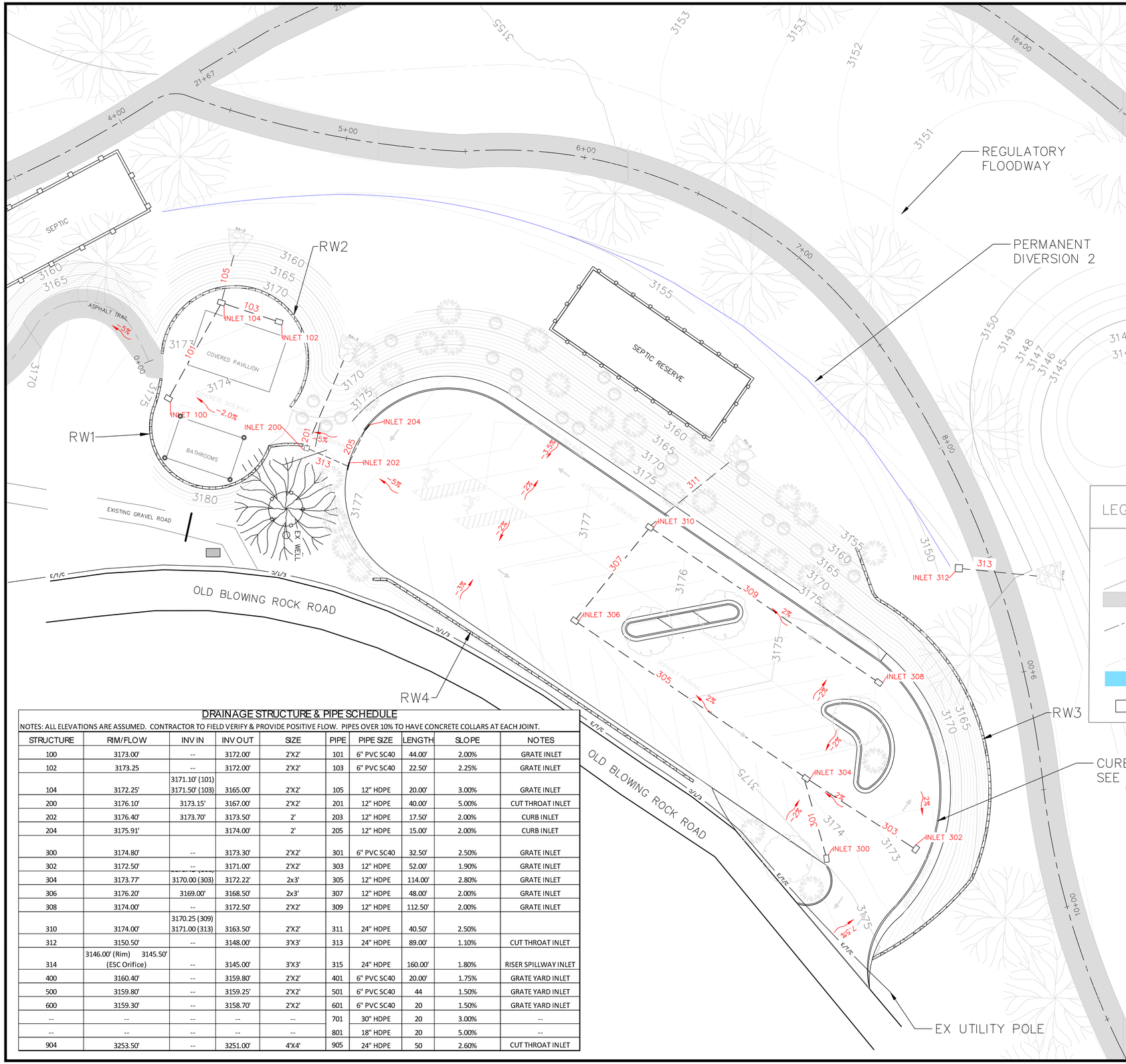

STORMWATER NOTES:

1. THE CONTRACTOR SHALL CLEAN OUT ACCUMULATED SILT IN STORMWATER CONVEYANCE CHANNELS, PIPES, AND DETENTION FACILITIES AT THE END OF CONSTRUCTION WHEN DISTURBED AREAS HAVE BEEN STABILIZED.
2. ALL HDPE STORM PIPE SHOWN ON THE IS PLAN SHALL BE WRAPPED WITH LOCATION WIRE AND TAPE.
3. ALTERNATIVE STRUCTURES AND MATERIALS MAY BE USED UPON APPROVAL BY PROJECT ENGINEER.
4. STORMWATER MANAGEMENT AND ESC MEASURES ARE TO BE ACCOMPLISHED PRIOR TO ANY OTHER CONSTRUCTION ON THE SITE AND MAINTAINED UNTIL PERMANENT GROUND COVER IS ESTABLISHED. STORMWATER MANAGEMENT SHALL BE IN ACCORDANCE WITH COUNTY, STATE, AND OTHER APPROPRIATE ORDINANCES AND REGULATIONS IN EFFECT AT THE TIME OF CONSTRUCTION PLAN APPROVAL.
5. SEE ESC PLAN FOR ALL APPROVED TEMPORARY MEASURES, TEMP/PERM GROUND STABILIZATION MEASURES, AND SEQUENCE OF CONSTRUCTION.

LEGEND

- 1' CONTOUR (PROPOSED)
- 5' CONTOUR (PROPOSED)
- PAVED TRAIL
- TRAIL CENTERLINE ALIGNMENT
- FLOODWAY
- AQUATIC FEATURES (EXTENT = TOP OF BANK)
- INLET
- PROPOSED PIPE
- STONE APRON
- RETAINING WALL
- UTILITY
- DIVERSION DITCH

DRAINAGE STRUCTURE & PIPE SCHEDULE

NOTES: ALL ELEVATIONS ARE ASSUMED. CONTRACTOR TO FIELD VERIFY & PROVIDE POSITIVE FLOW. PIPES OVER 10% TO HAVE CONCRETE COLLARS AT EACH JOINT.

STRUCTURE	RIM/FLOW	INV IN	INV OUT	SIZE	PIPE	PIPE SIZE	LENGTH	SLOPE	NOTES
100	3173.00'	--	3172.00'	2'X2'	101	6" PVC SC40	44.00'	2.00%	GRATE INLET
102	3173.25	--	3172.00'	2'X2'	103	6" PVC SC40	22.50'	2.25%	GRATE INLET
104	3172.25'	3171.10' (101) 3171.50' (103)	3165.00'	2'X2'	105	12" HDPE	20.00'	3.00%	GRATE INLET
200	3176.10'	3173.15'	3167.00'	2'X2'	201	12" HDPE	40.00'	5.00%	CUT THROAT INLET
202	3176.40'	3173.70'	3173.50'	2'	203	12" HDPE	17.50'	2.00%	CURB INLET
204	3175.91'		3174.00'	2'	205	12" HDPE	15.00'	2.00%	CURB INLET
300	3174.80'	--	3173.30'	2'X2'	301	6" PVC SC40	32.50'	2.50%	GRATE INLET
302	3172.50'	--	3171.00'	2'X2'	303	12" HDPE	52.00'	1.90%	GRATE INLET
304	3173.77'	[illegible] 3170.00 (303)	3172.22'	2x3'	305	12" HDPE	114.00'	2.80%	GRATE INLET
306	3176.20'	3169.00'	3168.50'	2x3'	307	12" HDPE	48.00'	2.00%	GRATE INLET
308	3174.00'	--	3172.50'	2'X2'	309	12" HDPE	112.50'	2.00%	GRATE INLET
310	3174.00'	3170.25 (309) 3171.00 (313)	3163.50'	2'X2'	311	24" HDPE	40.50'	2.50%	
312	3150.50'	--	3148.00'	3'X3'	313	24" HDPE	89.00'	1.10%	CUT THROAT INLET
314	3146.00' (Rim) 3145.50' (ESC Orifice)	--	3145.00'	3'X3'	315	24" HDPE	160.00'	1.80%	RISER SPILLWAY INLET
400	3160.40'	--	3159.80'	2'X2'	401	6" PVC SC40	20.00'	1.75%	GRATE YARD INLET
500	3159.80'	--	3159.25'	2'X2'	501	6" PVC SC40	44	1.50%	GRATE YARD INLET
600	3159.30'	--	3158.70'	2'X2'	601	6" PVC SC40	20	1.50%	GRATE YARD INLET
--	--	--	--	--	701	30" HDPE	20	3.00%	--
--	--	--	--	--	801	18" HDPE	20	5.00%	--
904	3253.50'	--	3251.00'	4'X4'	905	24" HDPE	50	2.60%	CUT THROAT INLET

IEC

WARREN CONSULTING & DESIGN, PLLC
850 9th Ave NW HICKORY, NC P-1005

CARL WARREN NORTH CAROLINA PROFESSIONAL ENGINEER SEAL 047390

REVISIONS

DATE

PREPARED FOR: BLUE RIDGE CONSERVANCY

BOONE GORGE PARK

TRAILHEAD – DRAINAGE PLAN

MIDDLE FORK GREENWAY
WATAUGA COUNTY, NC

SCALE: 1" = 20'

SHEET C4.2

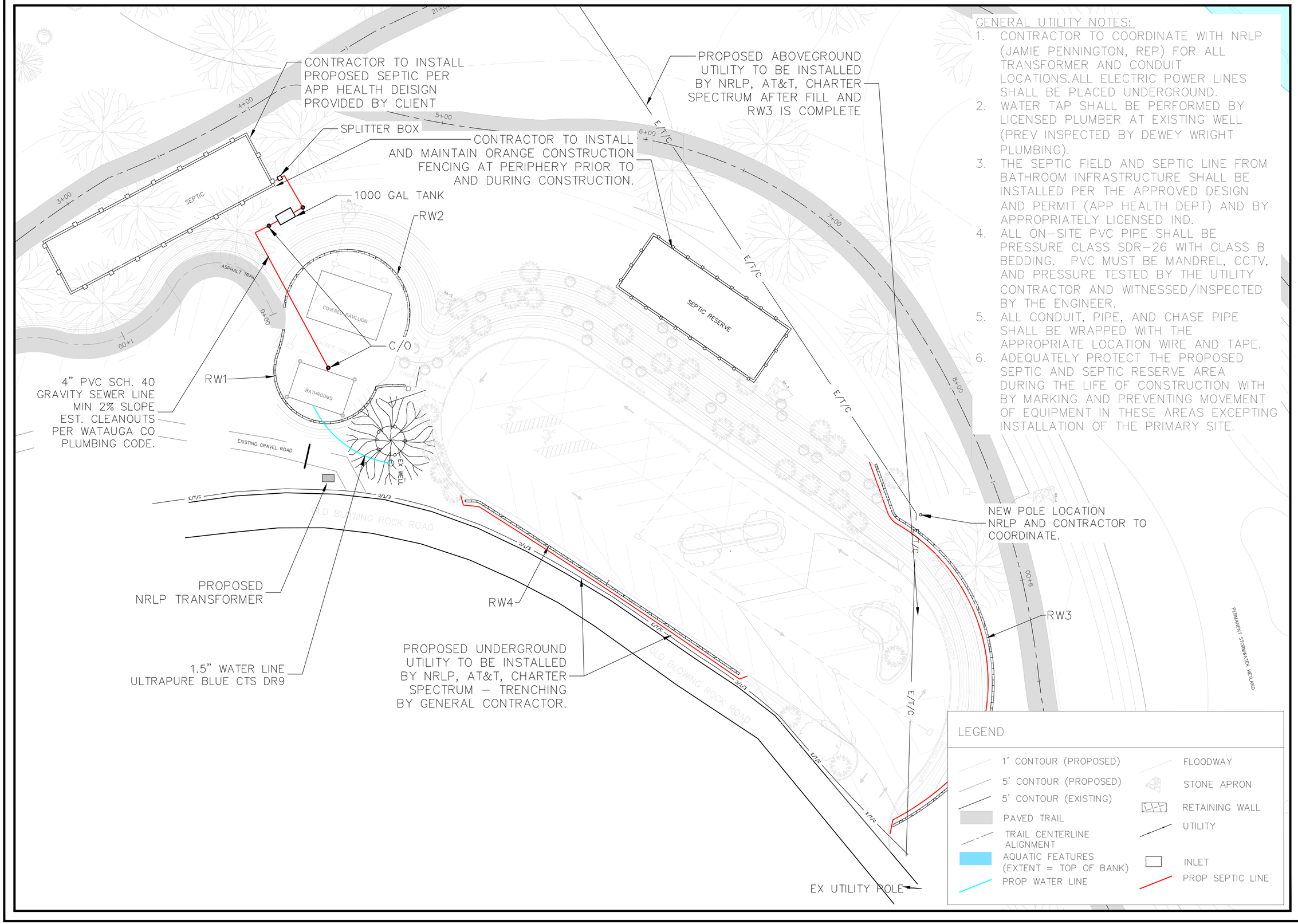

GENERAL UTILITY NOTES:

1. CONTRACTOR TO COORDINATE WITH NRLP (JAMIE PENNINGTON, REP) FOR ALL TRANSFORMER AND CONDUIT LOCATIONS.ALL ELECTRIC POWER LINES SHALL BE PLACED UNDERGROUND.
2. WATER TAP SHALL BE PERFORMED BY LICENSED PLUMBER AT EXISTING WELL (PREV INSPECTED BY DEWEY WRIGHT PLUMBING).
3. THE SEPTIC FIELD AND SEPTIC LINE FROM BATHROOM INFRASTRUCTURE SHALL BE INSTALLED PER THE APPROVED DESIGN AND PERMIT (APP HEALTH DEPT) AND BY APPROPRIATELY LICENSED IND.
4. ALL ON-SITE PVC PIPE SHALL BE PRESSURE CLASS SDR-26 WITH CLASS B BEDDING. PVC MUST BE MANDREL, CCTV, AND PRESSURE TESTED BY THE UTILITY CONTRACTOR AND WITNESSED/INSPECTED BY THE ENGINEER.
5. ALL CONDUIT, PIPE, AND CHASE PIPE SHALL BE WRAPPED WITH THE APPROPRIATE LOCATION WIRE AND TAPE.
6. ADEQUATELY PROTECT THE PROPOSED SEPTIC AND SEPTIC RESERVE AREA DURING THE LIFE OF CONSTRUCTION WITH BY MARKING AND PREVENTING MOVEMENT OF EQUIPMENT IN THESE AREAS EXCEPTING INSTALLATION OF THE PRIMARY SITE.

IEC

WARREN CONSULTING & DESIGN, PLLC
850 9th Ave NW HICKORY, NC P-1005

NORTH CAROLINA PROFESSIONAL SEAL 14380 ENGINEER PATRICK J. WARREN 4/7/22

REVISIONS	DATE

PREPARED FOR: BLUE RIDGE CONSERVANCY

BOONE GORGE PARK

TRAILHEAD – UTILITY PLAN

MIDDLE FORK GREENWAY
WATAUGA COUNTY, NC

SCALE: 1"=20'

SHEET C4.3

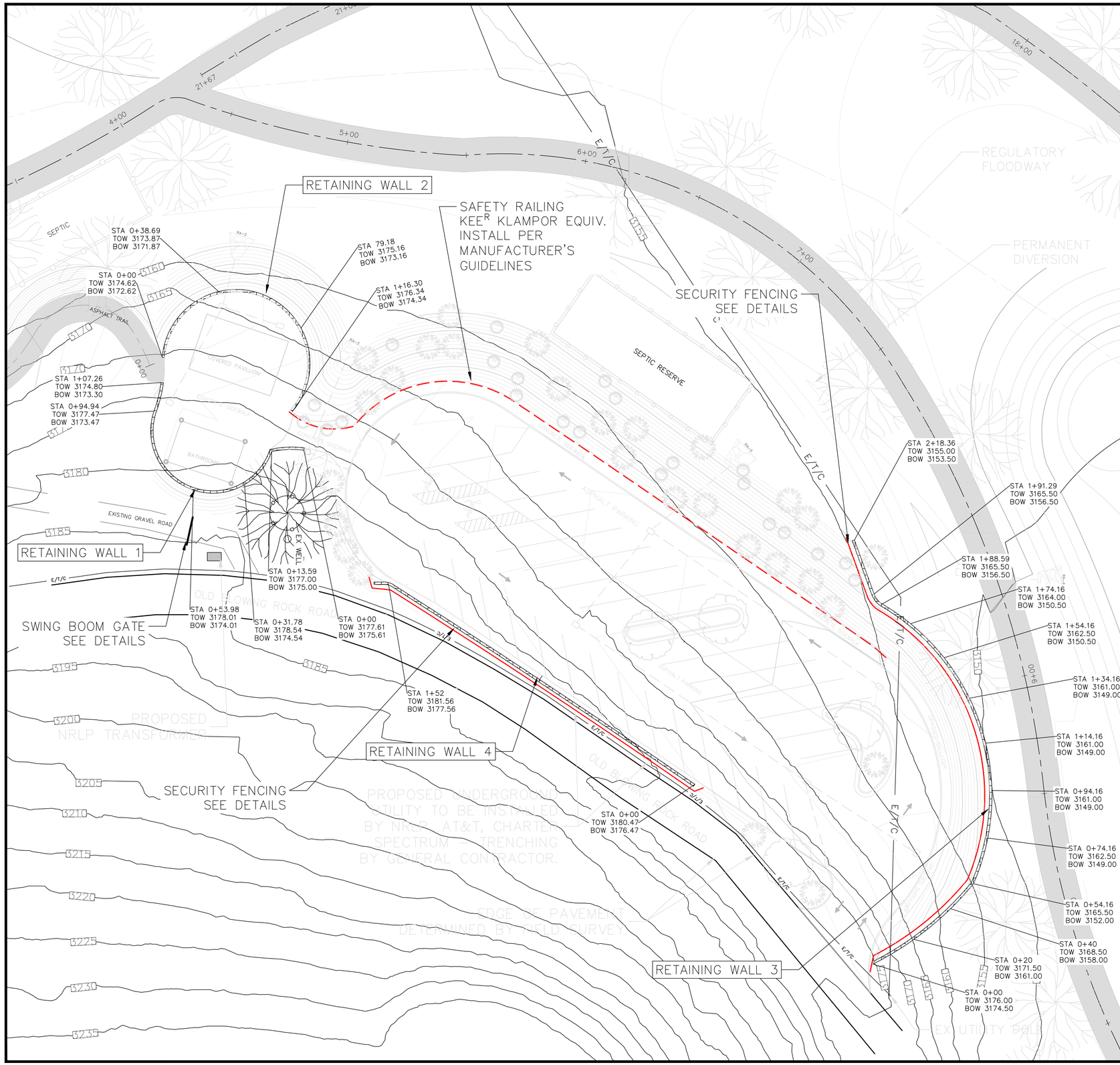

GENERAL NOTES:

1. ALL PROPOSED DIMENSIONS USED TO SHOW THE GEOMETRIC LAYOUT OF THE PROPOSED PARKING LOT ARE SHOWN AT THE FACE OF WALL. ALL PROPOSED DIMENSIONS USED TO SHOW THE GEOMETRIC LAYOUT OF THE PROPOSED WALLS ARE GIVEN AT THE STRUCTURE .
2. CONTRACTOR SHALL NOTIFY ENGINEER OF ANY DISCREPANCIES BETWEEN THE EXISTING CONDITIONS IN THE FIELD AND THE SURVEY SHOWN ON THE PLANS BEFORE PROCEEDING WITH ANY NEW CONSTRUCTION.
3. CONTRACTOR IS RESPONSIBLE FOR CORRECT HORIZONTAL AND VERTICAL ALIGNMENT OF RETAINING WALLS AND ADJACENT FILL/HARDSCAPES

RETAINING WALL NOTES:

1. RETAINING WALLS 1, 2, AND 4 ARE PROPOSED AS SEGMENTAL WALLS (KEYSTONE SEGMENTAL VISAGE TYPE) WITH GEOGRID BACKING. WALL DESIGNS ARE PROVIDED ON SHEETS SXX–SXX. WALLS 1 AND 4 WILL BE LINED UPSLOPE WITH SAFETY BARRIER FENCING. WALL 2 WILL BE TOPPED WITH A 6" SEATING CAP.
2. RETAINING WALL 3 IS PROPOSED AS A GRAVITY BLOCK WALL WITH FOOTERS AND A REINFORCED SLOPE ADJACENT UPFILL. WALL DESIGN AND SLOPE SPECIFICATIONS ARE PROVIDED ON SHEETS SXX–SXX.

LEGEND

- 1' CONTOUR (PROPOSED)
- 5' CONTOUR (PROPOSED)
- 5' CONTOUR (EXISTING)
- PAVED TRAIL
- TRAIL CENTERLINE ALIGNMENT
- AQUATIC FEATURES (EXTENT = TOP OF BANK)
- SAFETY RAILING
- FLOODWAY
- STONE APRON
- RETAINING WALL
- UTILITY
- INLET
- SECURITY FENCING

IEC

WARREN CONSULTING & DESIGN, PLLC
850 9th Ave NW HICKORY, NC P-1005

DATE

REVISIONS

PREPARED FOR: BLUE RIDGE CONSERVANCY

BOONE GORGE PARK
TRAILHEAD – HARDSCAPES
MIDDLE FORK GREENWAY
WATAUGA COUNTY, NC

SCALE: 1"=20'

SHEET C4.4

GENERAL NOTES:

1. SEE SECTION 3 CONSTRUCTION DOCUMENTS FOR TRAIL APPROACH PLAN/PROFILE TO PIER AND ACCESS AREA.
2. SEE ESC PLANS (X SHEETS) FOR ALL ESC MEASURES AND CONSTRUCTION STABILIZATION GUILDLINES NOT SPECIFIED IN THIS PLAN AND ACCOMPANYING DETAILS.
3. SEE STRUCTURAL PLANS (S SHEETS) FOR BRIDGE ABUTMENT AND FISHING PIER PLANS/DETAILS.
4. SEE LANDSCAPE PLANS (L SHEETS) FOR RIPARIAN BUFFER PLANTING PLANS/DETAILS.
5. REMOVE ALL INVASIVE VEGETATION MATERIAL AND ACCOMPANYING ROOTBALLS TO AN APPROVED RECEIVING SITE FOR ERADICATION.
6. ALL GROUND DISTURBING PRACTICES WITHIN 30' OF THE MFNR TOP OF BANK SHALL BE, AT LEAST, TEMP STABILIZED AT THE END OF EACH WORKING DAY.
7. NO IN-STREAM CONSTRUCTION IS PERMITTED DURING THE TROUT MORATORIUM FROM Oct 15 – APR 15 ANNUALLY.
8. USE OF BOULDERS EXCAVATED FROM SECTION 2 CONSTRUCTION ARE PREFERRED FOR STREAM MEASURES, GIVEN SIZE SPECIFICATION.

REMOVE ALL MULTIFLORA ROSA BY ROOT EXTRACTION AND REMOVAL TO APPROVED WASTE SITE. PRESERVE EX NATIVE TREE/SHRUBS.

RISER BOULDER STAIRS SEE DETAILS.

TOE WOOD SEE DETAILS.

MFNR TOP OF BANK (TOB)

BOULDER CLUSTERS SEE DETAILS.

PRESERVE EX TREES AND BANK OVERHANG

REMOVE ALL MULTIFLORA ROSA BY ROOT EXTRACTION AND REMOVAL TO APPROVED WASTE SITE. PRESERVE EX NATIVE TREE/SHRUBS.

ADA FISHING PIER (NIC)

LOG VANE SEE DETAILS.

MFNR

BRIDGE 2

SEE STRUCTURAL PLANS FOR ABUTMENT STABIIZATION.

LEGEND

- 1' CONTOUR (EXISTING)
- 5' CONTOUR (EXISTING)
- 1' CONTOUR (PROPOSED)
- 5' CONTOUR (PROPOSED)
- FEMA FLOODWAY
- CENTERLINE ALIGNMENT
- INVASIVE PLANT REMOVAL
- STREAMBANK SLOPING
- SILT FENCE
- AQUATIC FEATURES (TOB)
- PAVED TRAIL

0 40 80 Feet

IEC

WARREN CONSULTING & DESIGN, PLLC
850 9th Ave NW HICKORY, NC P-1005

MIDDLE FORK GREENWAY
BOONE GORGE PARK & TRAIL
BLUE RIDGE CONSERVANCY
WATAUGA COUNTY, NORTH CAROLINA

DATE: JUNE 2024
SCALE: 1" = 20'
REVISIONS:

STREAM RESTORATION PLAN
STA 0+00–7+10

SHEET C5.0

XSEC-1 STA 0+37.5

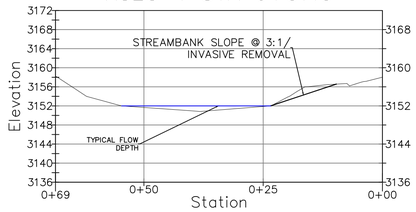

XSEC-2 STA 2+16.25

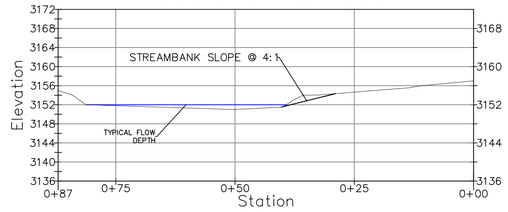

XSEC-3 STA 2+61.1

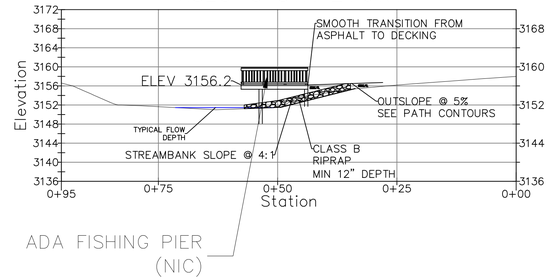

XSEC-4 STA 3+37.70

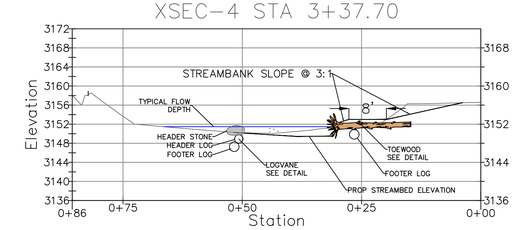

XSEC-5 STA 3+62.4

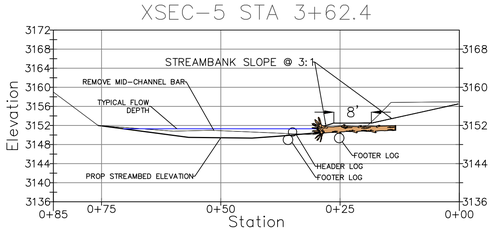

XSEC-6 STA 3+94

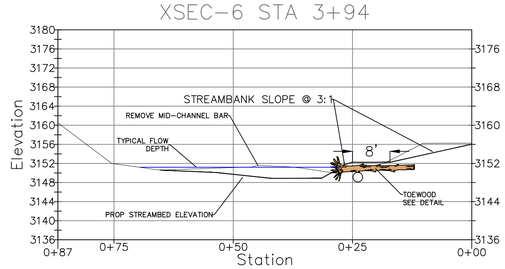

XSEC-7 STA 4+16.5

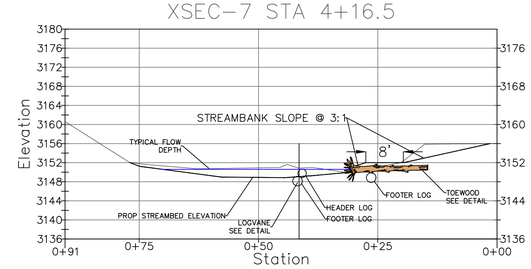

XSEC-8 STA 454.6

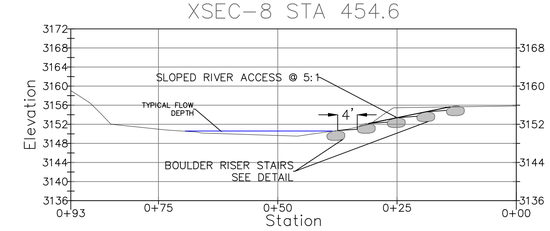

Stream Reach Thalweg Profile STA 0+00 – 7+10

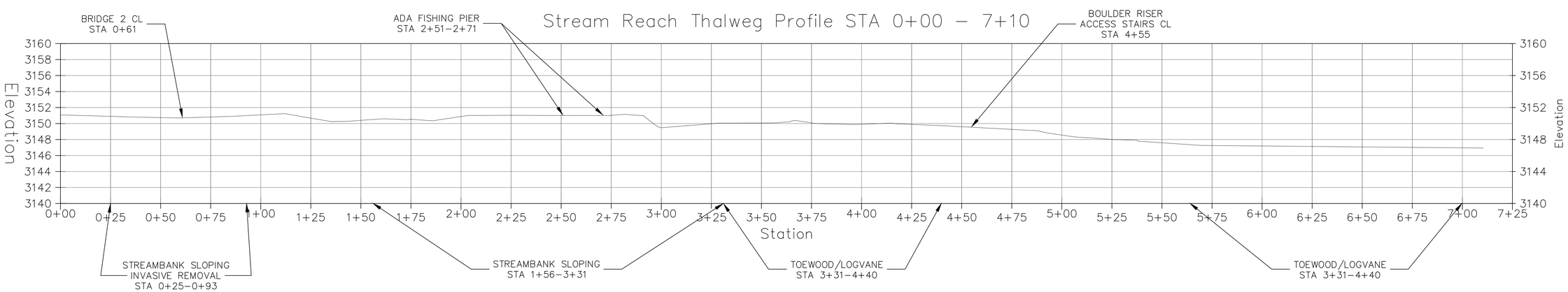

SCALE: 1" = 25'
HORIZONTAL: VERTICAL 1:4

IEC

WARREN CONSULTING & DESIGN, PLLC
850 9th Ave NW HICKORY, NC P-1005

MIDDLE FORK GREENWAY
BOONE GORGE PARK & TRAIL
BLUE RIDGE CONSERVANCY
WATAUGA COUNTY, NORTH CAROLINA

DATE: JUNE 2024
SCALE: 1" = 30
REVISIONS:

STREAM RESTORATION
PROFILE & CROSS SECTIONS
STA 0+00–7+10

SHEET C5.1

LOG VANE – PLANE VIEW
NOT TO SCALE

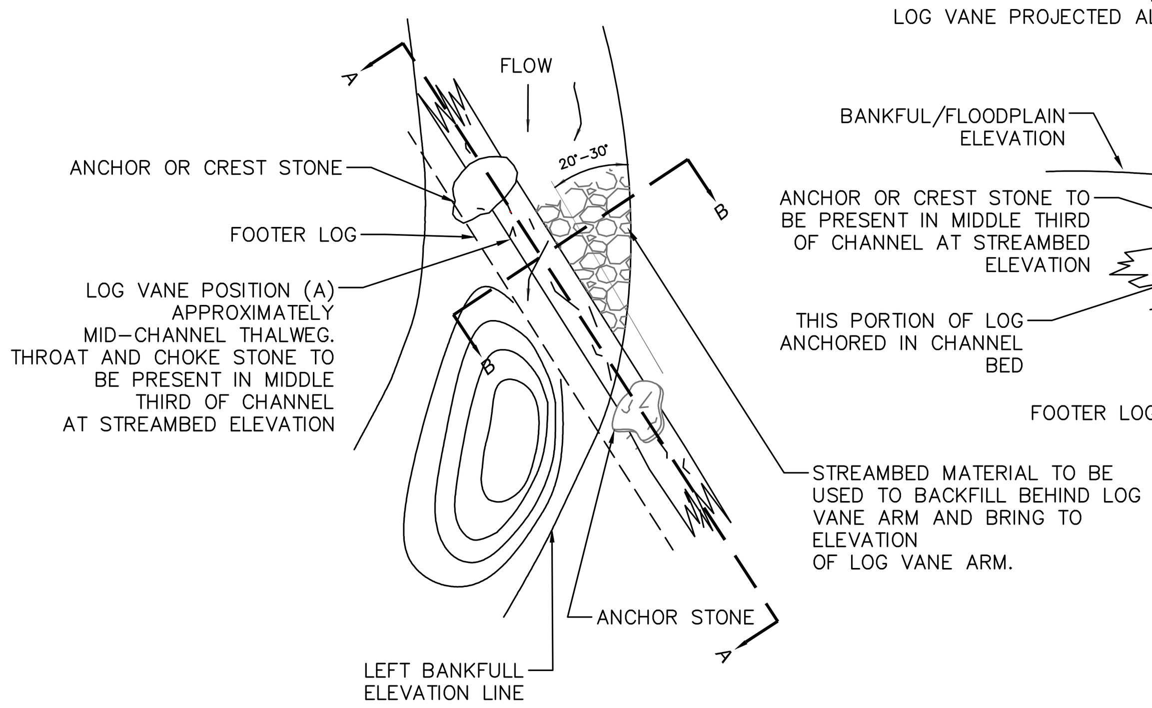

LOG VANE – SECTION VIEW A–A
NOT TO SCALE
LOG VANE PROJECTED ALONG STRUCTURE, NOT CROSS SECTION

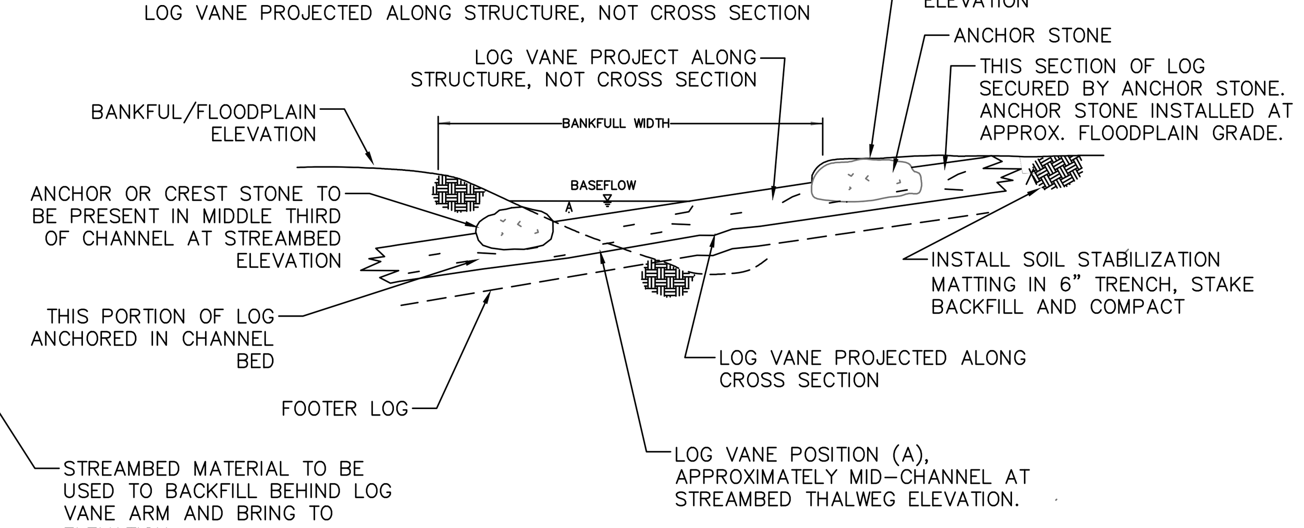

ARM SECTION B–B
NOT TO SCALE

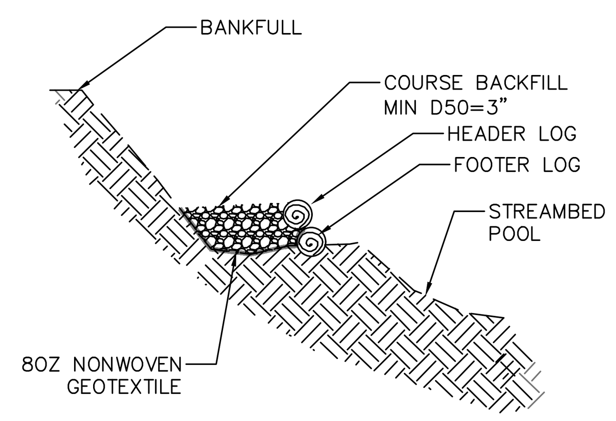

GENERAL NOTES:
1. LOG VANES WILL BE ANGLED @ 20–30' FROM STREAM BANK.
2. LOG VANES SHALL BE LARGE ENOUGH TO OCCUPY 2/3 OF THE POOL MAXIMUM DEPTH.
3. LOG VANE WILL BE SLOPED AT 2–7%
4. SEED AND SOIL STABILIZATION MATTING WILL BE PLACED ALONG STREAMBANKS FOR STABILIZATION PURPOSES WHERE DISTURBANCE HAS OCCURRED AS A RESULT OF STRUCTURE INSTILLATION.
5. DESIGN ENGINEER SHALL CONSIDER IMPLEMENTATION OF OTHER STREAMBANK PROTECTION MEASURES IN CONJUNCTION WITH LOG VANE STRUCTURE.

MATERIAL NOTES:

1. BOULDER W50 ~ 2000lb, D50 ~ 3ft. FLAT STACKING BOULDERS SHALL BE AT LEAST 4–5' X 3' X 3' (LENGTH X WIDTH X THICKNESS). STONES SHOULD BE STACKABLE TO CREATE A UNIFORM SURFACE CONDITION THAT WILL RESIST SHEAR STRESS FORCES OF MOVEMENT DURING THE FULL RANGE OF FLOW EVENTS.
2. VANE LOGS SHALL BE AT LEAST 20' IN LENGTH AND HAVE A MINIMUM DIAMETER AT BREAST HEIGHT (DBH) OF 24". USE OAK OR CHERRY SPECIES FREE FROM DISEASE FROM ON–SITE CLEARING. NO EVERGREENS.
3. SOIL STABILIZATION MATTING SHALL BE BRISTLE COIR FIBER MATTING CONSISTING OF MACHINE TWISTED TWINES AND BE 100% BIODEGRADABLE. STABILIZATION MATTING SHALL BE RESISTANT TO THE TRACTIVE FORCES OF THE STREAM CHANNEL DURING HIGH FLOW EVENTS. STABILIZATION MATTING WHICH USES PLASTICS, METALS OR OTHER MAN–MADE MATERIALS IN THE CONSTRUCTION OF MATERIAL WILL NOT BE PERMITTED. APPARENT OPENING SIZE SHALL BE SUFFICIENT TO FOSTER THE SPROUTING OF STABILIZATION/RESTORATION SEED MIXES.

CONSTRUCTION GUIDELINES:

ALL EROSION AND SEDIMENT CONTROL DEVICES SHOULD BE INSTALLED IN ACCORDANCE WITH AN APPROVED EROSION AND SEDIMENT CONTROL PLAN (ESC).
1. FLOW FROM THE STREAM SHOULD BE DIVERTED AWAY FROM THE WORK AREA IN ACCORDANCE WITH THE APPROVED ESC AND SITE SHOULD BE DEWATERED.
2. LOG VANES SHOULD BE ANGLED 20–30 DEGREES FROM THE UPSTREAM BANK. LOG VANE ARMS SHOULD BE INSTALLED WITH A VERTICAL ANGLE ALONG THE VANE ARM RANGING FROM TWO TO SEVEN PERCENT. LOG VANES SHOULD SPAN APPROXIMATELY ONE–HALF TO TWO–THIRDS OF THE BANKFULL CHANNEL WIDTH.
3. EXCAVATE THE TRENCH AND PREPARE AREA ALONG THE STREAMBANK AND IN STREAMBED FOR PLACEMENT OF FOOTER LOGS. PLACE HEADER LOG ONTO FOOTER LOGS WITH SPECIFIED GEOTEXTILE FABRIC AND BACKFILL MATERIAL SUCH THAT THE LOG VANE ARM THAT TIES INTO THE STREAMBANK WILL BE INSTALLED INSTALLED AT THE BANKFULL ELEVATION AND THE OTHER END OF THE LOG VANE ARM WILL BE EMBEDDED INTO THE STREAMED AT THE THALWEG ELEVATION AND WILL BE LOCATED WITHIN THE MIDDLE THIRD OF THE BANKFULL CHANNEL WIDTH.
4. ANCHOR ROCKS SHOULD BE INSTALLED ON TOP OF BOTH ENDS OF THE HEADER LOG VANE. ANCHOR STONES IN THE STREAMBED WILL BE OFFSET TO UPSTREAM SIDE OF THE LOG VANE AND PLACED TO MINIMIZE ROLLING OF ANCHOR STONE AND WILL NOT PROTRUDE FROM THE STREAMBED ELEVATION MORE THAN ONE–THIRD OF THE BANKFULL CHANNEL WIDTH.
5. THE LOG VANE ARM THAT TIES INTO THE STREAMBANK SHOULD EXTEND A MINIMUM OF 5–6' INTO THE STREAMBANK. ADDITIONALLY, THE THALWEG END OF THE STRUCTURE SHOULD BE EMBEDDED A MINIMUM OF 2–3'. WHEN TWO OR MORE SMALLER LOGS ARE USED TO ACCOMPLISH THE DESIGN SPECIFICATIONS OF THE LOG VANE, THE LOGS SHOULD BE SECURED TOGETHER WITH CABLES OR REBAR MATERIAL BASED UPON MANUFACTURING SPECIFICATIONS, LOG VANES SHOULD BE ANCHORED INTO THE STREAMBED WITH SUPPORT PILINGS OR DUCKBILL ANCHORS WITH LENGTHS EXCEEDING THE POTENTIAL OF LONG–TERM BED DEGRADATION AND/OR SCOUR DEPTHS.
6. PLACEMENT OF SAVAGED STREAMBED MATERIAL OBTAINED DURING THE TRENCH EXCAVATION WILL BE PLACED ALONG THE UPSTREAM SIDE OF THE LOG VANE ARM AND BETWEEN THE STREAMBANK TO CREATE A UNIFORM SLOPE BETWEEN THE LOG VANE ARM AD STREAMBANK. AT A MINIMUM, STREAMBED GRAVEL WILL BE PLACED TO THE ELEVATION OF THE SLOPING LOG VANE ON THE UPSTREAM SIDE OF THE LOG VANE.
7. SOIL STABILIZATION MATTING WILL BE INSTALLED ALONG THE STREAMBEANKS IN THE AREA OF DISTURBANCE AND SHOULD BE SEEDED, MULCHED, AND PLANTED WITH APPROVED LANDSCAPING.
8. REMOVE APPROVED ESC DEVICES UPON STABILIZATION OF THE CHANNEL IN ACCORDANCE WITH THE APPROVED PLAN.

LOG VANE
NTS

FOUNDATION LOGS – PLAN VIEW
NOT TO SCALE

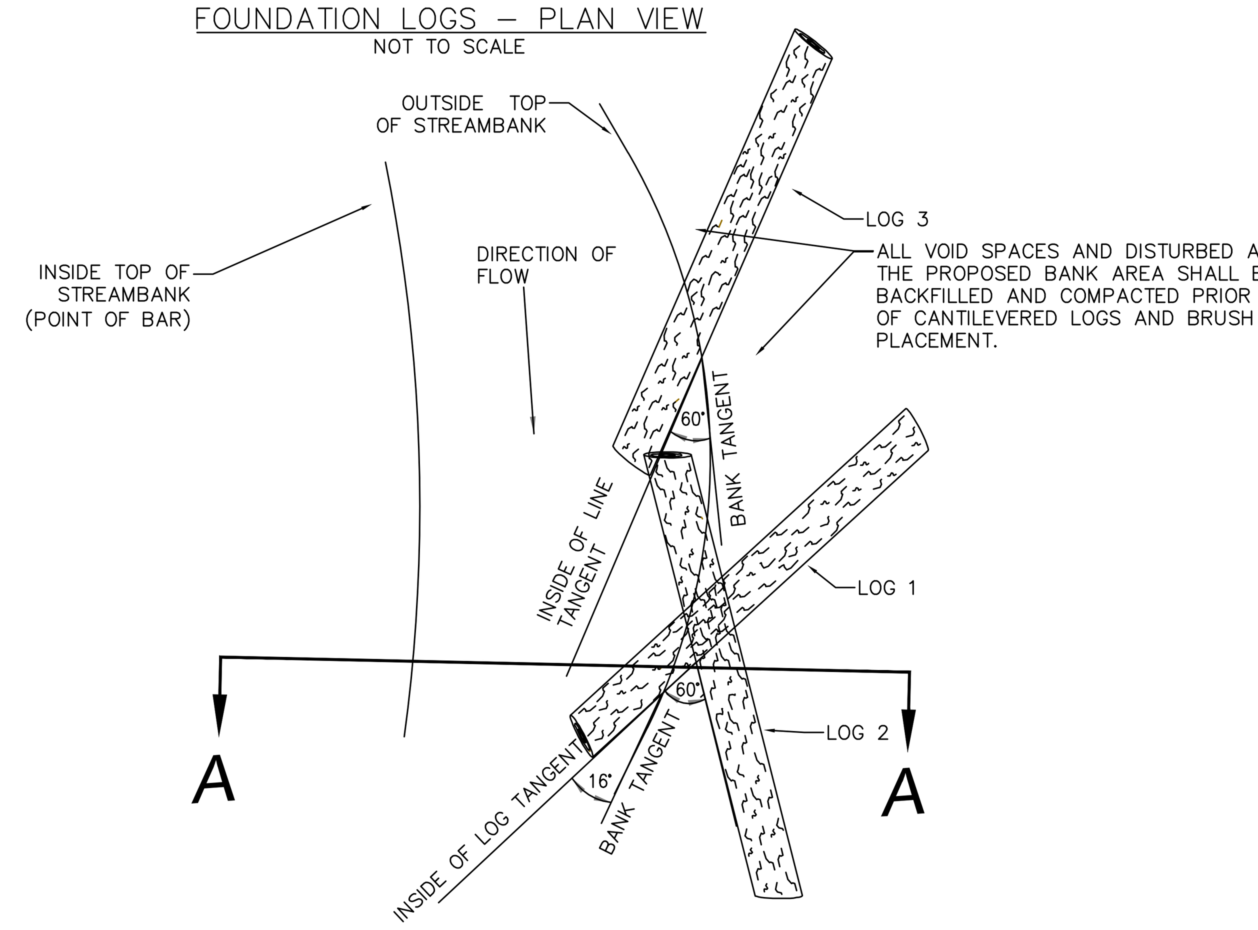

NOTES:
1. LOGS UTILIZED SHALL HAVE AN APPROPRIATE DIAMETER AND SHALL BE HARVESTED WITHIN THE PERMITTED LIMIT OF DISTURBANCE WHEN POSSIBLE
2. 3/4 OF THE TOTAL LENGTH OF THE FOUNDATION LOGS SHOULD BE BURIED
3. FOUNDATION LOG 2 SHALL BE PLACED ON TOP OF FOUNDATION LOG 1
4. EXACT ANGLES AND PLACEMENT OF LOGS WILL BE SITE DEPENDENT BASED ON LOCAL SITE CONDITIONS
5. FOUNDATION LOGS SHALL BE INSTALLED PRIOR TO THE PLACEMENT OF THE CANTILEVERED LOGS AND BRUSH

CANTILEVERED LOGS AND BRUSH PLACEMENT – PLAN VIEW
NOT TO SCALE

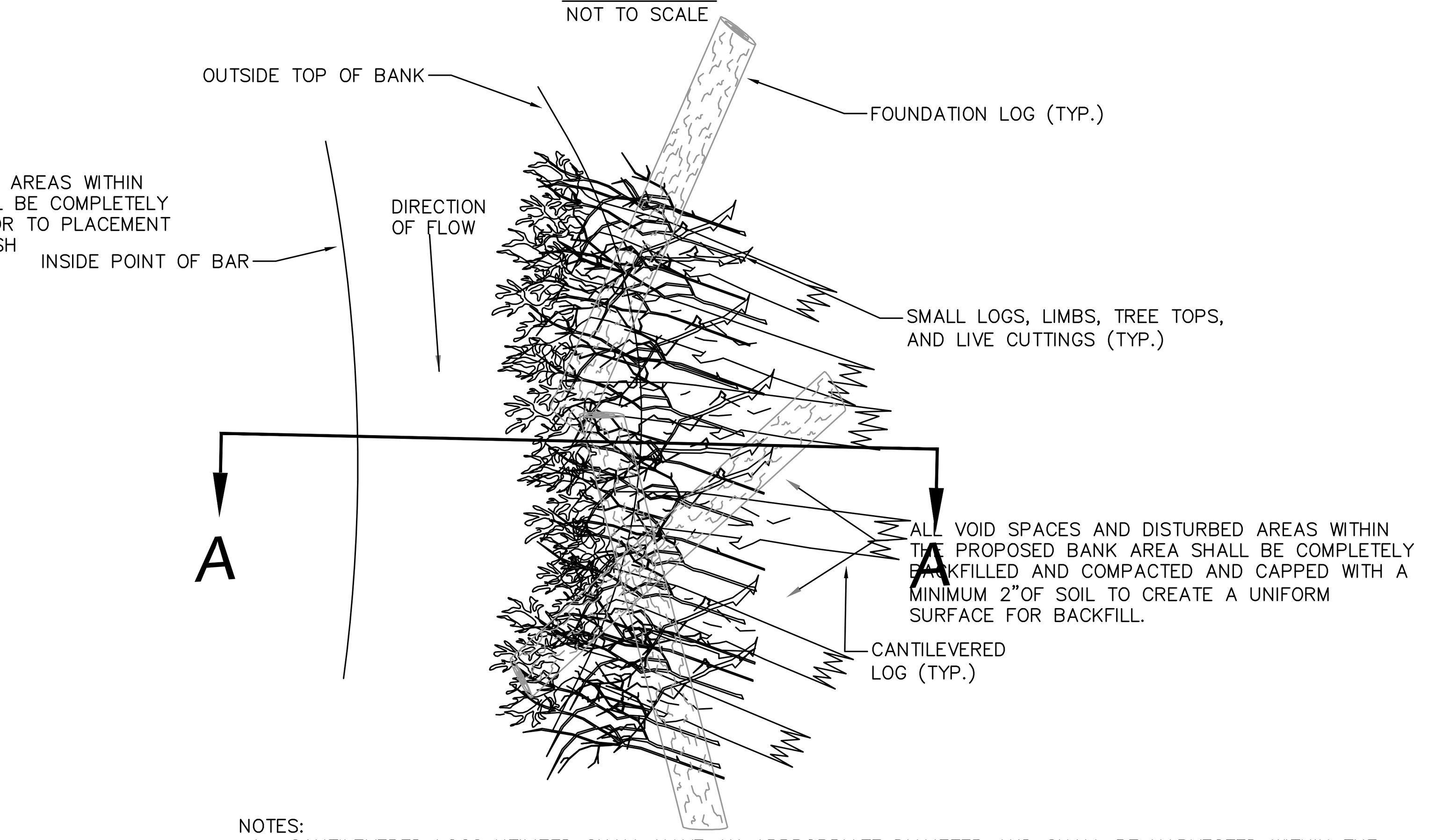

NOTES:
1. CANTILEVERED LOGS UTILIZED SHALL HAVE AN APPROPRIATE DIAMETER AND SHALL BE HARVESTED WITHIN THE PERMITTED LIMIT OF DISTURBANCE WHEN POSSIBLE.
2. CANTILEVERED LOGS SHALL BE PLACED ON TOP OF FOUNDATIONAL LOGS WITH 3/4 THE LENGTH OF THE CANTILEVERED LOG BURIED.
3. SMALL LOGS, LIMBS, TREE TOPS AND LIVE CUTTINGS (BRUSH LAYER) SHALL BE PLACED IN BETWEEN AND PARALLEL TO CANTILEVERED LOGS TO FORM A DENSE WOODY MAT.
4. ALL FOUNDATION AND CANTILEVERED LOGS AND BRUSH LAYER SHALL BE PLACED AT AN ELEVATION RELATIVE TO THE NORMAL DEPTH OF STREAM CHANNEL TO REMAIN PERMANENTLY SUBMERGED TO PREVENT WOOD DETERIORATION.
5. FILL IN AND COMPACT ALL VOID SPACE BETWEEN CANTILEVERED LOGS THEN PLACE A SHALLOW LAYER OF BACKFILL (APROX 2") OVER PLACED BRUSH LAYER

BACKFILL AND BIO–ENGINEERING MATERIAL – SECTIONAL VIEW
NOT TO SCALE

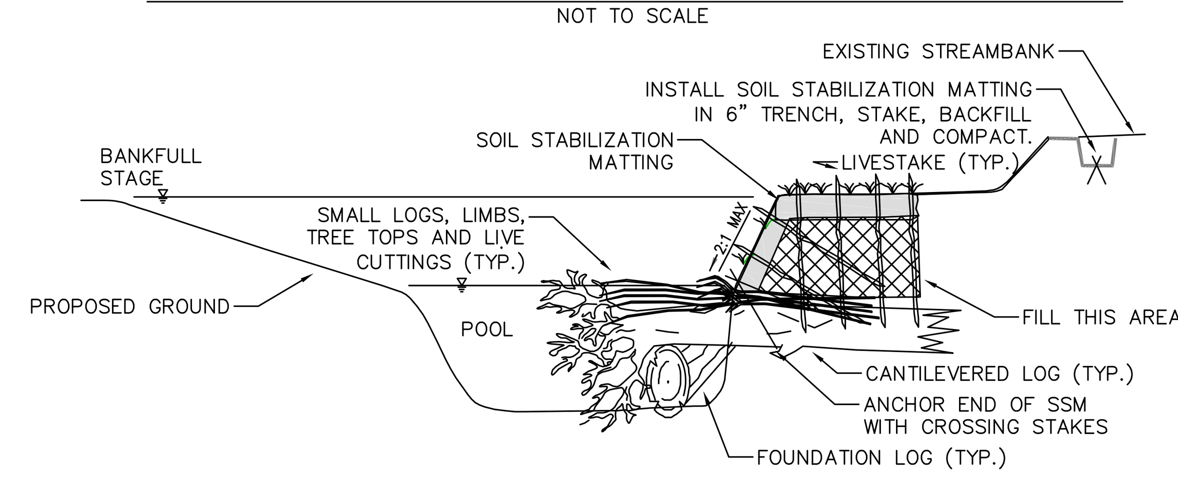

NOTES
1. SOD MATS SHALL BE HARVESTED WITHIN THE PERMITTED LIMIT OF DISTURBANCE WHEN PERMITTED
2. FILL MATERIAL FOR THE TOEWOOD STRUCTURES SHALL BE CONSTRUCTED IN 6" SOIL LIFTS WRAPPED IN SOIL STABILIZATION MATTING.
3. SOIL STABILIZATION MATTING SHOULD BE PROPERLY ANCHORED ACCORDING TO MANUFACTURERS SPECIFICATIONS.
4. BACKFILL UTILIZED SHOULD BE CLEAN FILL OR TOPSOIL TO PROVIDE A GOOD GROWING MEDIUM.
5. LIVE STAKES SHALL BE APPROPRIATE LENGTH TO EXTEND INTO THE WATER TABLE.

MATERIAL NOTES:

1. ROOTWAD LOGS SHALL BE AT LEAST 20' IN LENGTH AND HAVE A MINIMUM DIAMETER AT BREAST HEIGHT (DBH) OF 24". USE OAK OR CHERRY SPECIES FROM ON–SITE CLEARING WITHIN APPROVED LIMITS OF DISTURBANCE IF POSSIBLE.. NO EVERGREENS.
2. SHALLOW–ROOTED RATHER THAN DEEP–ROOTED TREE SPECIES WITH RATIOS OF ROOT FAN DIAMETERS TO BOLE DIAMETERS OF 4.0 OR GREATER ARE PREFERRED; AVOID NARROW BASED, FAN DIAMETER RATIOS LESS THAN 3.0.
3. LIVE CUTTINGS AND STAKES SHALL CONSIST OF SPECIES NATIVE TO THE AREA AND SHALL CONFORM TO THE STANDARDS OF THE CURRENT EDITION OF THE AMERICAN STANDARD OF NURSERY STOCK AS APPROVED BY THE AMERICAN STANDARDS INSTITUTE, INC. LIVE CUTTINGS AND LIVE STAKES SHALL BE OBTAINED FROM AN APPROVED NURSERY THAT MEETS OR EXCEEDS THESE STANDARDS.
4. SOIL STABILIZATION MATTING SHALL BE BRISTLE CHOIR FIBER MATTING CONSISTING OF MACHINE TWISTED TWINES AND BE 100% BIODEGRADABLE. SOIL SOIL STABILIZATION MATTING SHALL BE RESISTANT TO THE TRACTIVE FORCES OF THE STREAM CHANNEL DURING HIGH FLOW EVENTS. SOIL STABILIZATION MATTING WHICH USES PLASTICS, METALS OR OTHER MAN–MADE MATERIALS IN THE CONSTRUCTION OF THE MATERIAL WILL NOT BE PERMITTED. APPARENT OPENING SIZE SHALL BE SUFFICIENT TO FOSTER THE SPROUTING OF STABILIZATION.RESTORATION SEED MIXES.
5. STAKES SHALL BE 100% BIODEGRADABLE MATERIAL AND SHALL BE DESIGNED TO SAFELY AND EFFECTIVELY SECURE EROSION CONTROL BLANKETS, COIR LOGS, FASCINES, AND OTHER BIOENGINEERED STRUCTURES FOR TEMPORARY OR PERMANENT APPLICATIONS.

CONSTRUCTION NOTES

ALL EROSION AND SEDIMENT CONTROL DEVICES SHOULD BE INSTALLED IN ACCORDANCE WITH AN APPROVED EROSION AND SEDIMENT CONTROL PLAN (ESC).
1. FLOW FROM THE STREAM SHOULD BE DIVERTED AWAY FROM THE WORK AREA IN ACCORDANCE WITH THE APPROVED ESC AND THE SITE SHOULD BE DEWATERED.
2. EXCAVATE OR RESHAPE THE CHANNEL TO ACCOMMODATE THE AREA WHERE THE TOE WOOD STRUCTURE IS TO BE PLACED.
3. PLACE THE FOUNDATION LOGS IN THE CONFIGURATION AND ANGLES ACCORDING THE THE PLAN VIEW. THE BOTTOM ELEVATION OF THE FOUNDATION LOGS SHALL BE EYEAL TO THE PROPOSED/EXISTING STREAMBED ELEVATION. APPROXIMATELY 75% OF THE FOUNDATION LOGS WILL BE BURIED WITHIN THE STREAMBANK. THE OTHER 25% OF THE LOGS WILL BE EXPOSED IN THE CHANNEL, BELOW THE SURFACE OF THE WATER.
4. FILL ALL VOID SPACES AND DISTURBED AREAS WITHIN THE STREAMBANK AREA AND COMPACT THE SOIL PRIOR TO THE PLACEMENT OF THE CANTILEVERED LOGS.
5. PLACE CANTILEVERED LOGS ON TOP OF THE FOUNDATION LOGS IN A TIGHT FORMATION PERPENDICULAR TO THE ANGLE OF THE STREAMBANK ACCORDING TO THE PLAN VIEW.
6. WHEN PROPERLY PLACED, APPROXIMATELY 75% OF THE CANTILEVERED LOGS WILL BE BURIED WITHIN THE STREAMBANK., LEAVING ENDS WITH ROOTS, LIMBS, BRANCHES AND SNAGS EXPOSED IN FRONT OF THE STREAMBANK. THE OTHER 25% OF THE LOGS WILL BE EXPOSED IN THE CHANNEL, BELOW THE SURFACE OF THE WATER.
7. FILL ALL VOID SPACES BETWEEN AND AROUND THE CANTILEVERED LOGS TO THE TOP ELEVATION OF THE LOGS AND COMPACT THE SOIL.
8. PLACE BRUSH CONSISTING OF SMALLER BRANCHES, LIMNS AND TREE TOPS ALONG WITH LIVE CUTTINGS FROM WOODY PLANT SPECIES ADAPTED TO AT WET HYDROLOGY IN A DENSE LAYER PERPENDICULAR TO THE STREAMBANK ON TOP OF THE FILLED AND COMPACTED CANTILEVERED LOGS. THE ENDS OF THE BRUSH AND LIVE CUTTINGS SHALL BE EXPOSED BELOW THE SURFACE OF THE WATER EQUAL TO THE CANTILEVERED LOGS.
9. PLACE A SHALLOW LAYER OF BACKFILL(APPROXIMATELY 2" OF NATIVE SOIL OR APPROVED TOPSOIL) ON TOP OF THE BRUSH LAYER AND LIVE CUTTINGS THAT WILL BE BURIED WITHIN THE STREAMBANK.
10. ONCE THE SHALLOW LAYER OF BACKFILL IS COMPACTED, PLACE NATIVE SOIL OR APPROVED TOPSOIL TO THE LINES AND GRADES OF THE TOP OF STREAMBANK.
11. FILL MATERIAL FOR THE TOW WOOD STRUCTURE SHALL BE CONSTRUCTED IN 6" SOIL LIFTS WRAPPED IN SOIL STABILIZATION MATTING. PLACE AND ANCHOR SOIL STABILIZATION MATTING ACCORDING TO THE MANUFACTURER'S SPECIFICATIONS. USE HARDWOOD CROSSING STAKES DRIVEN INTO THE BANK AS SHOWN ON THE PLAN VIEW. THE OTHER END OF THE SOIL STABILIZATION MATTING SHOULD BE PROPERLY TRENCHED INTO THE SOIL.
12. REMOVE APPROVED ESC DEVICES UPON STABILIZATION OF THE CHANNEL IN ACCORDANCE WITH THE APPROVED PLAN.

TOE WOOD
NTS

IEC
WARREN CONSULTING & DESIGN, PLLC
850 9th Ave NW HICKORY, NC P–1005

NORTH CAROLINA PROFESSIONAL SEAL 19380 ENGINEER PATRICK WARREN 4/7/25

MIDDLE FORK GREENWAY
BOONE GORGE PARK & TRAIL
BLUE RIDGE CONSERVANCY
WATAUGA COUNTY, NORTH CAROLINA

DATE: JUNE 2024
SCALE: 1" = 30
REVISIONS:

STREAM RESTORATION DETAILS

SHEET C5.2

RANDOM BOULDER PLACEMENT – PLAN VIEW

NOT TO SCALE

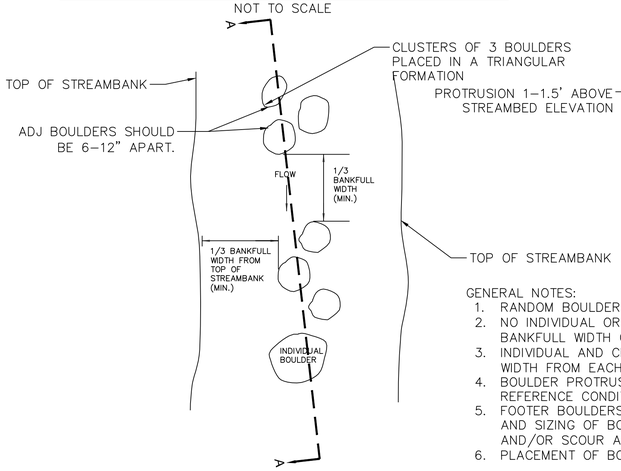

RANDOM BOULDER PLACEMENT – SECTION VIEW A–A

NOT TO SCALE

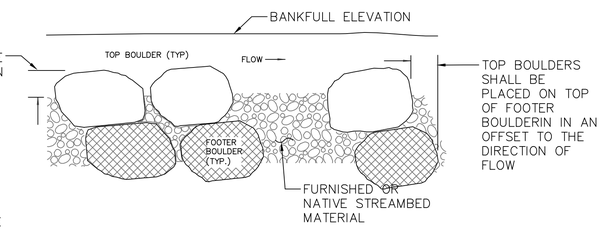

GENERAL NOTES:

1. RANDOM BOULDER PLACEMENT SHALL ONLY BE UTILIZED IN RIFFLE SECTION.
2. NO INDIVIDUAL OR CLUSTER OF BOULDERS SHALL BE PLACED WITHIN 1/3 OF THE PROPOSED BANKFULL WIDTH OF THE CHANNEL.
3. INDIVIDUAL AND CLUSTER BOULDERS SHALL BE PLACED A MINIMUM OF 1/3 OF THE BANKFULL WIDTH FROM EACH OTHER ALONG THE STREAM PROFILE.
4. BOULDER PROTRUSION DEPTH TO BE SPECIFIED BY DESIGN ENGINEER AND BASED UPON A REFERENCE CONDITION.
5. FOOTER BOULDERS MAY NOT BE NECESSARY FOR EVERY APPLICATION. USE OF FOOTER BOULDERS AND SIZING OF BOULDERS SHALL BE DETERMINED BY THE LEVEL OF PROPOSED TRACTIVE FORCES AND/OR SCOUR ANALYSIS
6. PLACEMENT OF BOULDERS SHALL NOT CREATE STREAMBANK EROSION.

CONSTRUCTION GUIDELINES

ALL EROSION AND SEDIMENT CONTROL DEVICES SHOULD BE INSTALLED IN ACCORDANCE WITH AN APPROVED EROSION AND SEDIMENT CONTROL PLAN (ESC)

1. FLOW FROM THE STREAM SHOULD BE DIVERTED AWAY FROM THE WORK AREA IN ACCORDANCE WITH THE APPROVED ESC AND THE SITE SHOULD BE DEWATERED.
2. CALCULATIONS OF BOULDER SIZING SHOULD BE PROVIDED WHICH VALIDATE THE MATERIALS ARE ABLE TO RESIST TRACTIVE FORCES OF THE 100– YEAR DESIGN STORM.
3. IT IS RECOMMENDED THAT THE INSTALLATION OF THE BOULDERS OCCUR DURING A PERIOD OF DRY WEATHER AND LOW FLOW CONDITIONS TO ENSURE THAT STREAMED MATERIALS PROPERLY SETTLE AROUND THE BOULDERS.
4. IF FOOTER BOULDERS ARE REQUIRED DUE TO DEPTH OF ANTICIPATED SCOUR OR LONG–TERM POTENTIAL FOR VERTICAL DEGRADATION OF THE STREAMBED, THEN THE RIO OF BOULDER SHALL BE PLACED IN AN OFFSET DIRECTION TO UPSTREAM FLOW AS INDICATED ON THE DETAILS.
5. NO BOULDER SHALL PROTRUDE MORE THAN THIRTY PERCENT OF THE BANKFULL STREAM DEPTH ABOVE THE STREAMBED ELEVATION.
6. BOULDER CLUSTERS MAY CONSIST OF 3 TO 5 BOULDERS ARRANGED IN A TRIANGULAR FORMATION IN CLOSE PROXIMITY TO ONE ANOTHER WITH NO BOULDER HAVING 1/3 OF THE CHANNEL.
7. NO INDIVIDUAL BOULDER CLUSTER SHALL BE PLACED WITHIN 1/3 OF THE BANKFULL WIDTH FROM ONE ANOTHER ALONG THE LONGITUDINAL LENGHT OF THE CHANNEL.
8. REMOVE APPROVED ESC DEVICES UPON STABILIZATION OF THE CHANNEL IN ACCORDANCE WITH THE APPROVED PLAN.

MATERIAL NOTES:

1. BOULDER W50 ~ 2000lb, D50 ~ 3ft. FLAT STACKING BOULDERS SHALL BE AT LEAST 4–5' X 3' X 3' (LENGTH X WIDTH X THICKNESS). STONES SHOULD BE STACKABLE TO CREATE A UNIFORM SURFACE CONDITION THAT WILL RESIST SHEAR STRESS FORCES OF MOVEMENT DURING THE FULL RANGE OF FLOW EVENTS.

BOULDER CLUSTER

NTS

BOULDER STAIRS – PROFILE VIEW

NOT TO SCALE

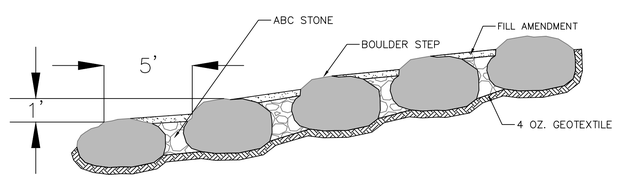

BOULDER STAIRS – PLAN VIEW

NOT TO SCALE

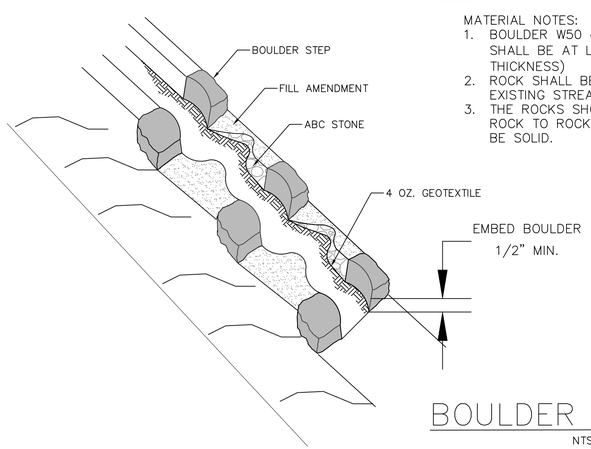

MATERIAL NOTES:

1. BOULDER W50 ~ 2000lb, D50 ~ 3ft. FLAT STACKING BOULDERS SHALL BE AT LEAST 3–5' X 2–3' X 2' (LENGTH X WIDTH X THICKNESS)
2. ROCK SHALL BE NATIVE STONE HARVESTED LOCALLY OR FROM EXISTING STREAM WHEN POSSIBLE.
3. THE ROCKS SHOULD BE RECTANGULAR OR NEARLY SO AT THE ROCK TO ROCK CONTACT. THE ROCK TO ROCK CONTACT SHOULD BE SOLID.

CONSTRUCTION NOTES:

1. CONSTRUCTION SHOULD BEGIN AT LOWEST POINT OF SLOPE.
2. EXCAVATE THE MINIMUM AMOUNT OF MATERIAL TO PROVIDE SUITABLE RECESS.
3. NON–WOVEN 4 OZ. GEOTEXTILE SHALL BE PLACE BEHIND ALL BOULDER LAYERS BEFORE NATIVE STONE BACKFILL IS PLACED BEHIND THE BOULDER.
4. WHEN ENDING/BEGINNING TOE NON–ADJACENT TO AN EXISTING SLOPE; PROVIDE A CARRIAGE ROCK AT LEAST AS THICK AS THE BOTTOM 2–3 LAYERS AND AT LEAST AS WIDE AS THE TOP BOULDER LAYER TO HELP PREVENT FILL AND BOULDER MOVEMENT.

BOULDER STAIRS

NTS

STABILIZATION NOTES

STABILIZE ALL DISTURBED AREAS WITHIN A 25' BUFFER OF THE TOP OF BANK AT THE END OF EACH WORKING DAY. TEMPORARY MATTING CAN BE LAID OVER AND TEMPORARY ANCHORED AT AREAS WHERE WORK WILL COMMENCE THE FOLLOWING DAY.

COMPLETE ENTIRETY OF INDIVIDUAL STRUCTURES WITHIN THE WORKING DAY.

REUSE TREES AND BOULDERS HARVESTED IN TRAIL SECTION 2A/2B FOR USE IN STREAM RESTORATION ACTIVITIES TO THE GREATEST EXTENT PRACTICABLE GIVEN TECHNICAL SPECIFICATIONS.

SEE LANDSCAPE PLAN (L SHEETS) FOR SEEDING AND RIPARIAN BUFFER RESTORATION.

MATTING SPECIFICATIONS

USE COIR FIBER OR "JUTE" MATTING ON ALL "ZONE A" AREAS REFERRING TO INSTALLATION AND STAPLE GUILDLINES PROVIDED BELOW. ZONE A AREAS INCLUDE 3:1 SLOPES FROM THE EOW TO BENCH AND THE ENTIRETY OF THE BENCH AREA.

AREAS ABOVE THE BENCH SHALL BE HYDROSEEDED WITH SEED, AMENDMANT, AND STABILIZATION TACKIFIER OR ELSE MATTED WITH NAG DS150 (DOUBLE NET) MATTING OR EQUIVALENT AFTER SEED/AMEND APPLICATION.

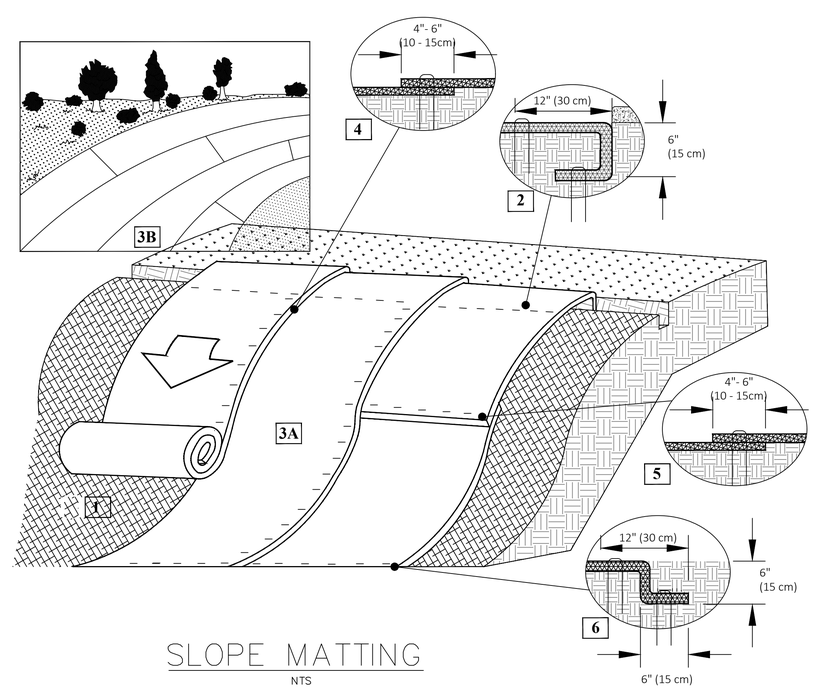

SLOPE MATTING

NTS

Instructions

1. Prepare soil before installing rolled erosion control products (RECPs), including any necessary application of lime, fertilizer, and seed. Ground surface must be free of debris, rocks, clay clods and raked smooth sufficient to allow intimate contact of the RECP with the soil over the entirety of the installation.
2. Begin at the top of the slope by anchoring the RECPs in a 6" (15 cm) deep X 6" (15 cm) wide trench. Anchor the RECPs with a row of staples/stakes/pins spaced at S_T apart in the bottom of the trench. Backfill and compact the trench after stapling and fold the roll over downslope. Secure RECPs over compacted soil with a row of staples/stakes/pins spaced at S_T apart across the width of the RECPs.
3. Roll the RECPs (A) down or (B) horizontally across the slope. RECPs will unroll with appropriate side against the soil surface. All RECPs must be securely fastened to soil surface by placing staples/stakes/pins in appropriate locations as shown in the staple pattern guide. Consecutive RECPs spliced down the slope must overlapped with the upstream mat atop the downstream mat (shingle style). At the terminal end, secure each mat across the width with a row of staples/stakes/pins.
4. Fasteners should provide a minimum of twenty pounds of pullout resistance. Six–inch (10 cm) X one–inch (2.5 cm) eleven gauge staples are typically adequate. In loose soils, longer staples may be necessary, twist pins can provide the greatest pullout resistance.

IEC

WARREN CONSULTING & DESIGN, PLLC
850 9th Ave NW HICKORY, NC P–1005

MIDDLE FORK GREENWAY
BOONE GORGE PARK & TRAIL
BLUE RIDGE CONSERVANCY
WATAUGA COUNTY, NORTH CAROLINA

DATE: JUNE 2024
SCALE: 1" = 30
REVISIONS:

STREAM RESTORATION
DETAILS

SHEET C5.3

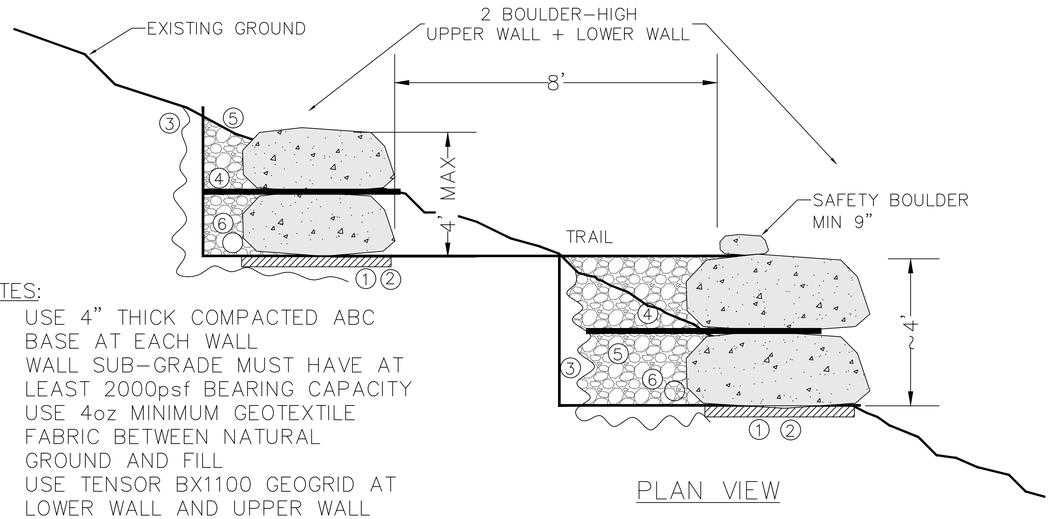

PLAN VIEW

NOTES:

1. USE 4" THICK COMPACTED ABC BASE AT EACH WALL
2. WALL SUB-GRADE MUST HAVE AT LEAST 2000psf BEARING CAPACITY
3. USE 4oz MINIMUM GEOTEXTILE FABRIC BETWEEN NATURAL GROUND AND FILL
4. USE TENSOR BX1100 GEOGRID AT LOWER WALL AND UPPER WALL
5. USE COMPACTED #57 GRAVEL AS BACKFILL
6. USE 4" DRAIN PIPE BEHIND EACH BOULDER WALL WITH OUTLET EVERY 100ft

TRAIL BOULDER RETAINING WALL DETAIL (UPPER AND LOWER)

NOT TO SCALE

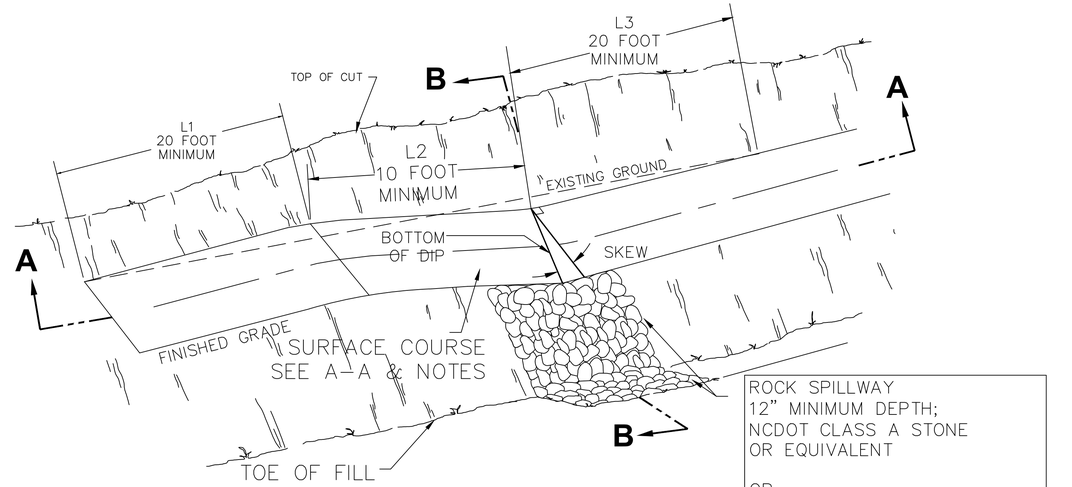

ROCK SPILLWAY
12" MINIMUM DEPTH;
NCDOT CLASS A STONE
OR EQUIVALENT

OR

RIPRAP APRON
(SEE RIPRAP APRON SCHEDULE
AND RIPRAP APRON DETAIL)

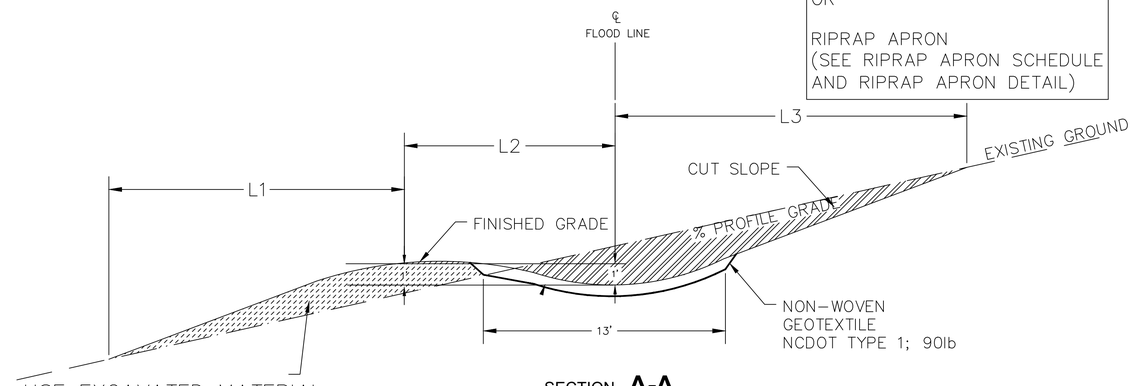

SECTION **A-A**

6 INCH MINIMUM
SURFACE COURSE;
3" SURGE STONE TOPPED
W/ CRUSHED CONCRETE.

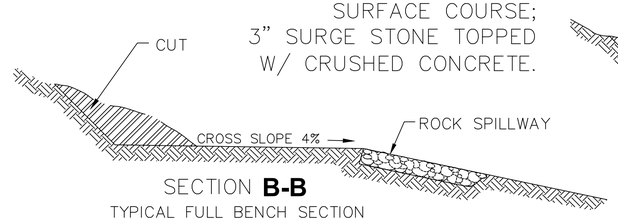

SECTION **B-B**
TYPICAL FULL BENCH SECTION

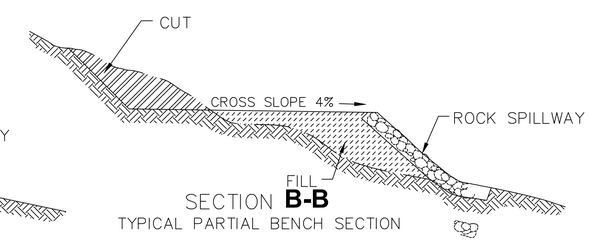

SECTION **B-B**
TYPICAL PARTIAL BENCH SECTION

NOTES:

1. DRAIN DIPS WILL BE STAKED IN THE FIELD AND LOCATIONS ADJUSTED AS NECESSARY TO ENSURE ADEQUATE TRAIL SLOPES AND DOWNSLOPE PROTECTION.
2. ROCK SPILLWAY SLOPE SHALL BE THE SAME AS THE NATURAL GROUND SLOPE OR CONSTRUCTED FILL SLOPE.
3. APPLY SURFACE COARSE WHEN CONSTRUCTING IN PARTIAL BENCH OR FULL BENCH SOFT SOILS.
4. ROCK SPILLWAY SHALL EXTEND A MIN. 6' FROM EDGE OF TRAIL IN FULL BENCH CUT; SPILLWAY SHALL EXTEND 2' PAST FILL SLOPE IN PARTIAL BENCH CUT.
5. USE NATIVE STONE FROM GRADING WHENEVER POSSIBLE, OTHERWISE USE CLASS A STONE OR EQUIVALENT.

TRAIL GRADE DIP
ADAPTED FROM USFS STD 927-01/02

NOT TO SCALE

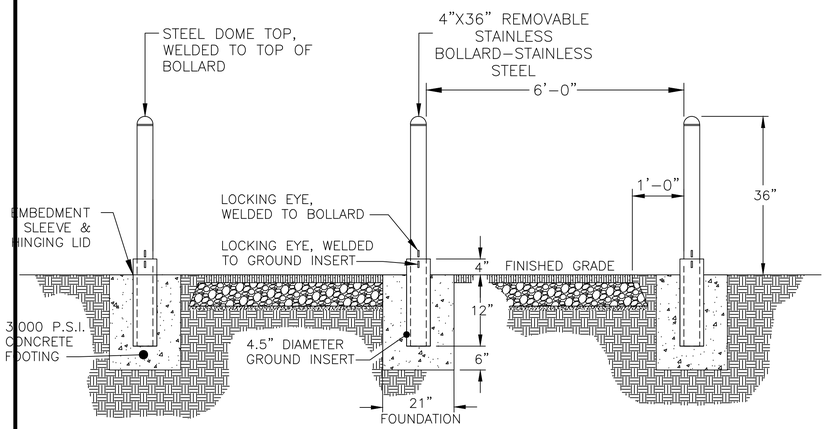

FRONT VIEW

NOTES:
ALIGN BOLLARD PIPE & GROUND INSERT SO EYES ARE LOCATED AT BACK & FRONT OF BOLLARD, NOT STICKING OUT INTO TRAVEL WAY.
ALL METAL SHALL BE GALVANIZED

4"X36" REMOVABLE BOLLARD

NOT TO SCALE

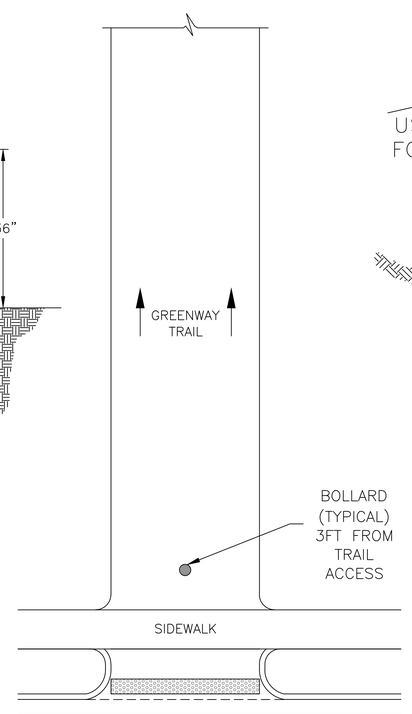

PLAN VIEW

IEC

WARREN CONSULTING & DESIGN, PLLC
850 9th Ave NW HICKORY, NC P-1005

NORTH CAROLINA PROFESSIONAL ENGINEER SEAL 038361 PATRICK WARREN
4/17/25

DATE

REVISIONS

PREPARED FOR: BLUE RIDGE CONSERVANCY

BOONE GORGE PARK
CONSTRUCTION DETAILS
MIDDLE FORK GREENWAY
WATAUGA COUNTY, NC

SHEET
C6.0

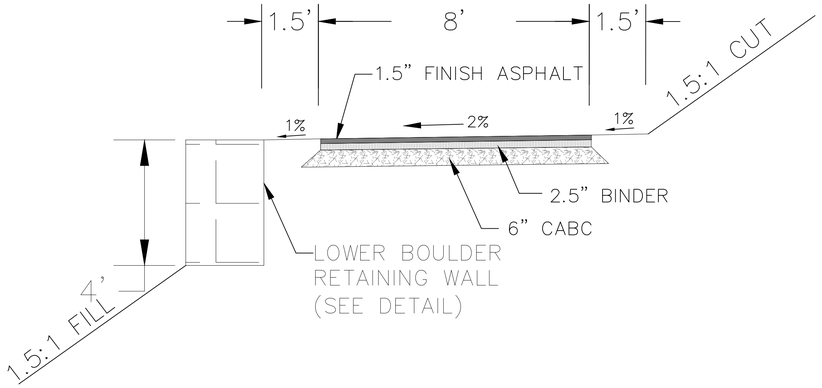

SECTION 1A - STA 0+00-0+50.48

NOT TO SCALE

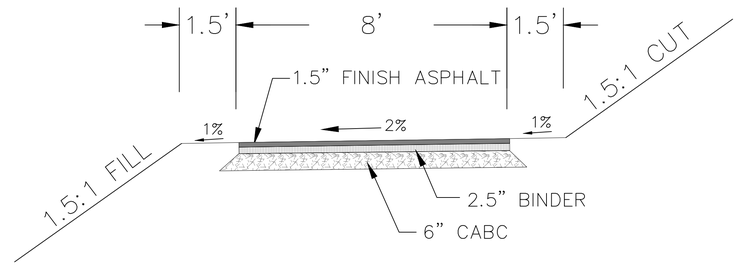

SECTION 1A - STA 50.48 - 219.35

NOT TO SCALE

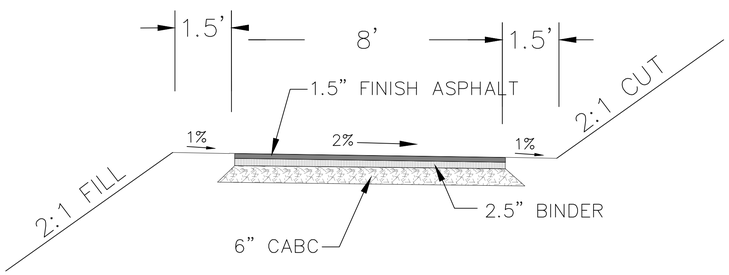

SECTION 1B - STA 0+00 - 0+30.00

NOT TO SCALE

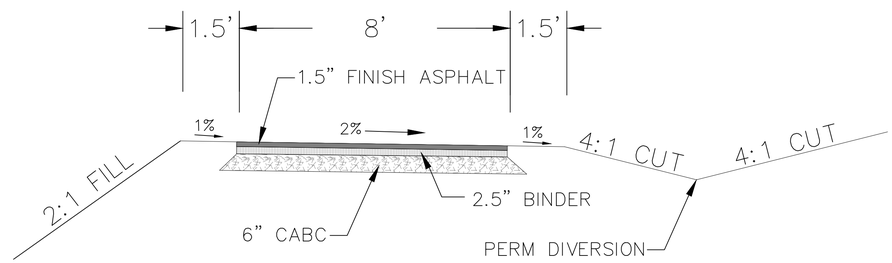

SECTION 1B - STA 0+30.00 - 2+18.00

NOT TO SCALE

IEC

WARREN CONSULTING & DESIGN, PLLC
850 9th Ave NW HICKORY, NC P-1005

NORTH CAROLINA PROFESSIONAL ENGINEER SEAL 038361 PATRICK WARREN
4/17/25

REVISIONS DATE

PREPARED FOR: BLUE RIDGE CONSERVANCY

BOONE GORGE PARK
CONSTRUCTION DETAILS
MIDDLE FORK GREENWAY
WATAUGA COUNTY, NC

SHEET
C6.1

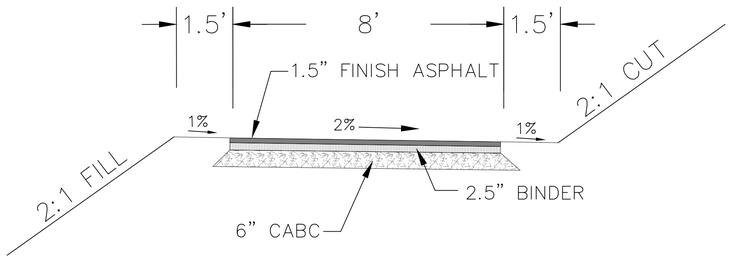

SECTION 1B - STA 2+18.00 - 2+80.62

NOT TO SCALE

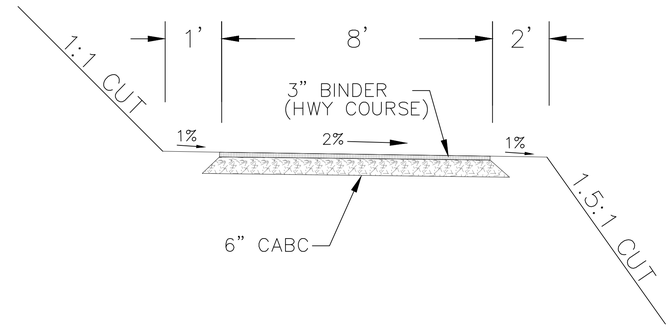

SECTION 2A - STA 0+00 - 1+97.58

NOT TO SCALE

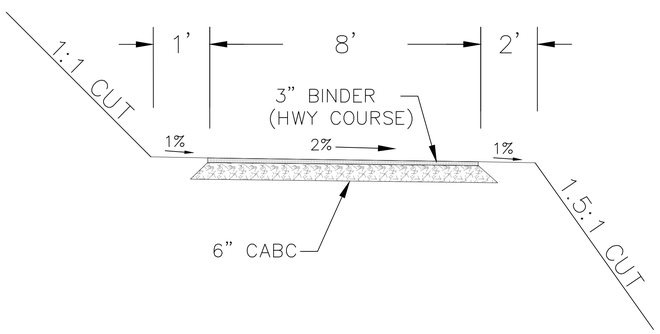

SECTION 2B - STA 0+00 - 0+30.00

NOT TO SCALE

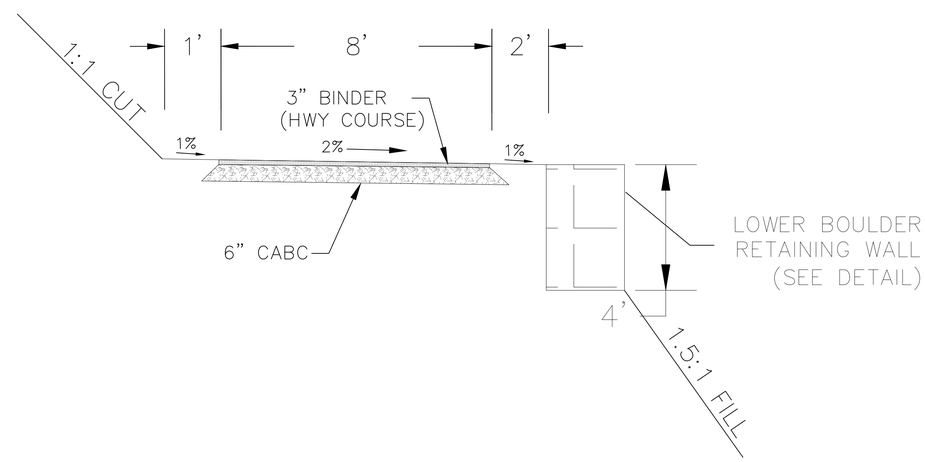

SECTION 2B - STA 0+30 - 1+35.00

NOT TO SCALE

IEC

WARREN CONSULTING & DESIGN, PLLC
850 9th Ave NW HICKORY, NC P-1005

NORTH CAROLINA PROFESSIONAL ENGINEER SEAL 036380 PATRICK WARREN 4/17/25

REVISIONS DATE

PREPARED FOR: BLUE RIDGE CONSERVANCY

BOONE GORGE PARK
CONSTRUCTION DETAILS
MIDDLE FORK GREENWAY
WATAUGA COUNTY, NC

SHEET
C6.2

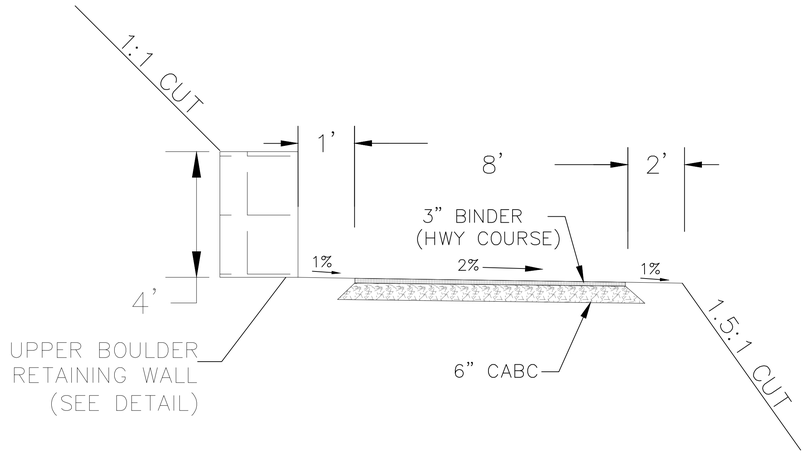

SECTION 2B - STA 1+35 - 1+75.00

NOT TO SCALE

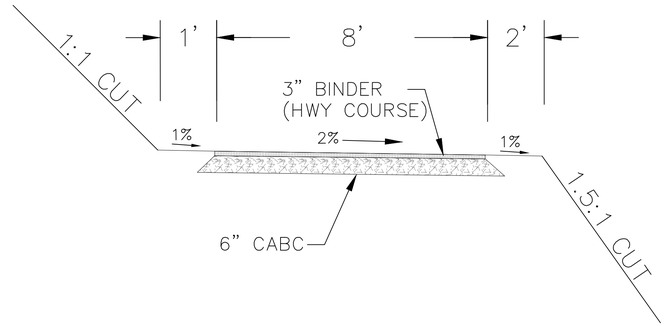

SECTION 2B - STA 1+75 - 4+30.00

NOT TO SCALE

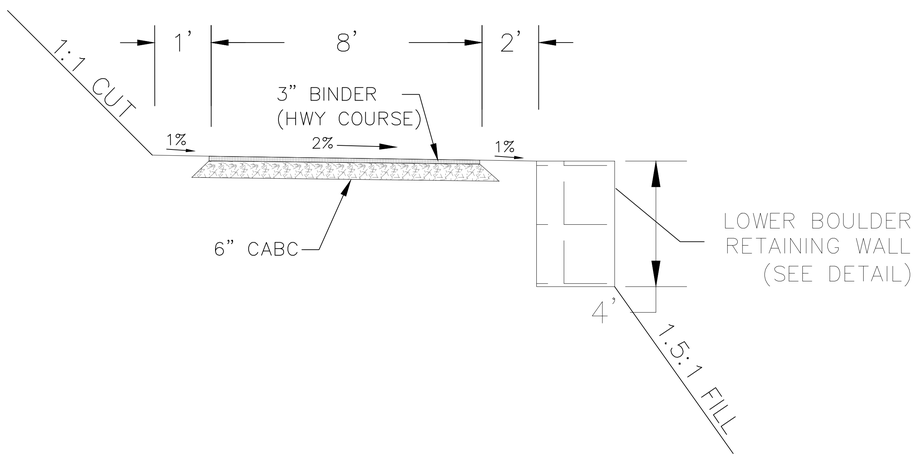

SECTION 2B - STA 4+30 - 582.00

NOT TO SCALE

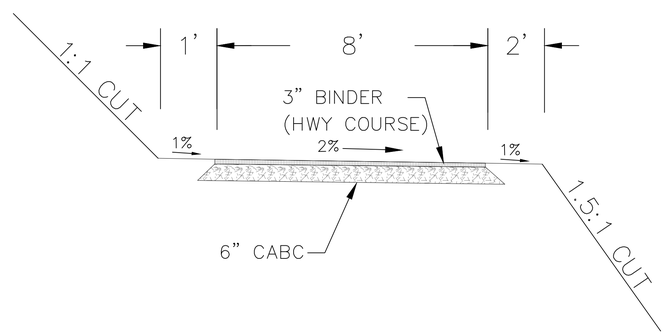

SECTION 2B - STA 5+82 - 6+02.00

NOT TO SCALE

IEC

WARREN CONSULTING & DESIGN, PLLC
850 9th Ave NW HICKORY, NC P-1005

NORTH CAROLINA PROFESSIONAL ENGINEER SEAL 038361 PATRICK WARREN 4/17/25

REVISIONS DATE

PREPARED FOR: BLUE RIDGE CONSERVANCY

BOONE GORGE PARK
CONSTRUCTION DETAILS
MIDDLE FORK GREENWAY
WATAUGA COUNTY, NC

SHEET
C6.3

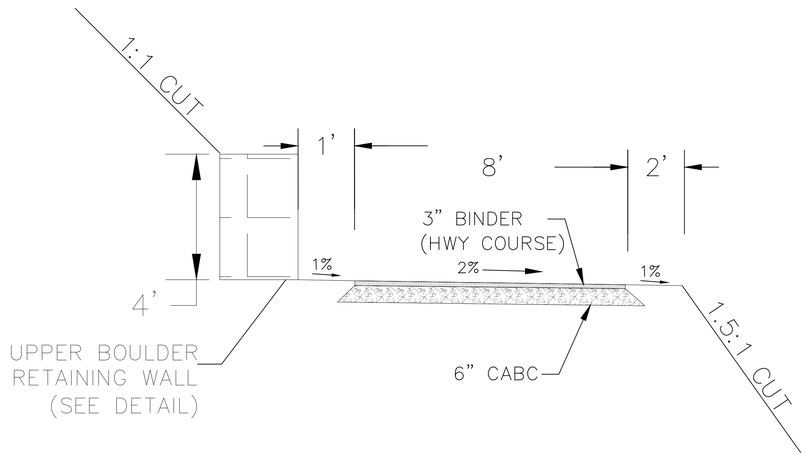

SECTION 2B - STA 6+02 - 6+25.00

NOT TO SCALE

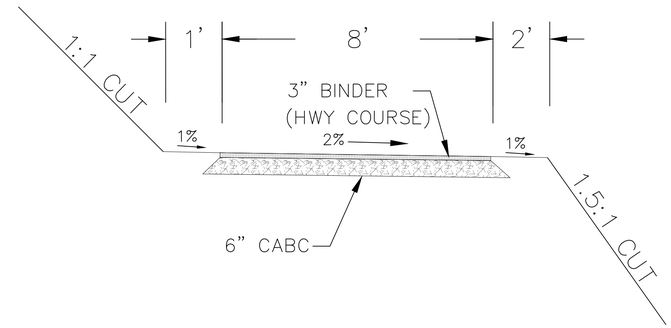

SECTION 2B - STA 6+25 - 6+58.87

NOT TO SCALE

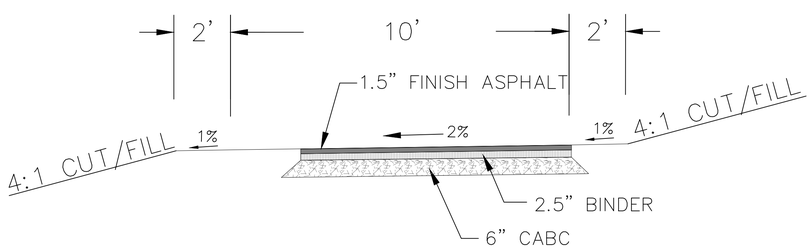

SECTION 3 MAIN TRAIL LOOP - STA 0+00 - 11+18.13

NOT TO SCALE

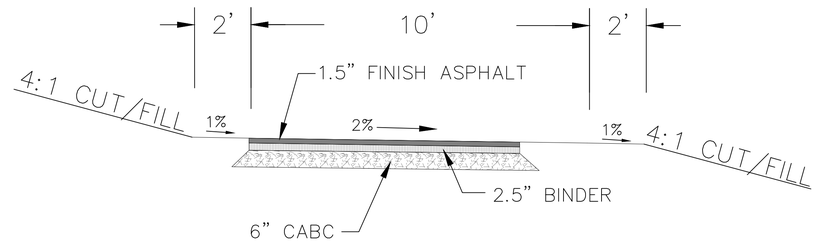

SECTION 3 MAIN TRAIL LOOP - STA 11+18.13 - 12+18.76

NOT TO SCALE

IEC

WARREN CONSULTING & DESIGN, PLLC
850 9th Ave NW HICKORY, NC P-1005

NORTH CAROLINA PROFESSIONAL SEAL 23361 ENGINEER PATRICK WARREN 4/17/25

REVISIONS DATE

PREPARED FOR: BLUE RIDGE CONSERVANCY

BOONE GORGE PARK
CONSTRUCTION DETAILS
MIDDLE FORK GREENWAY
WATAUGA COUNTY, NC

SHEET
C6.4

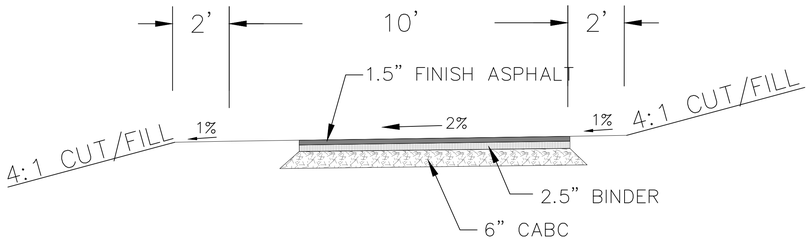

SECTION 3 MAIN TRAIL LOOP - STA 12+18.76 - 21.84.89

NOT TO SCALE

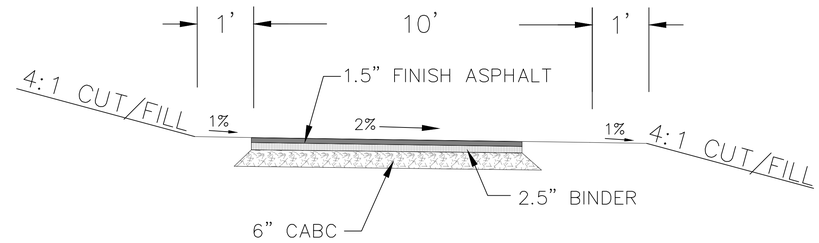

SECTION 3 TRAILHEAD ACCESS - STA 0+00 - 272.01

NOT TO SCALE

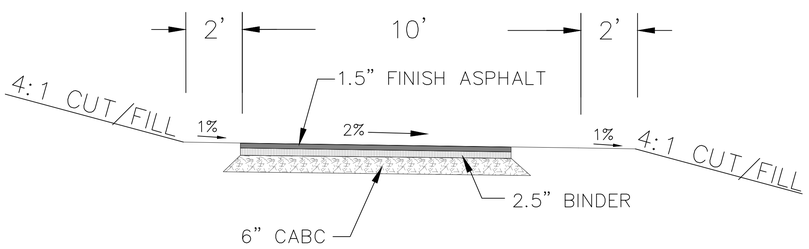

SECTION 3 RIVER ACCESS 1 - STA 0+00 - 0+78.42

NOT TO SCALE

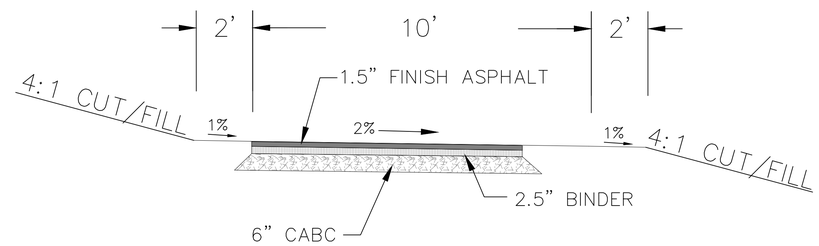

SECTION 3 RIVER ACCESS 2 - STA 0+00 - 1+24.00

NOT TO SCALE

IEC

WARREN CONSULTING & DESIGN, PLLC
850 9th Ave NW HICKORY, NC P-1005

NORTH CAROLINA PROFESSIONAL ENGINEER SEAL 045361 WILLIAM PATRICK WARREN
4/7/25

REVISIONS DATE

PREPARED FOR: BLUE RIDGE CONSERVANCY

BOONE GORGE PARK
CONSTRUCTION DETAILS
MIDDLE FORK GREENWAY
WATAUGA COUNTY, NC

SHEET
C6.5

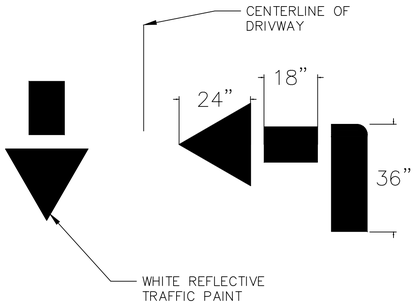

NOTES:
USE THIS DETAIL FOR INTERNAL PARKING AREA CIRCULATION CONTROL. PAVEMENT MARKINGS ADJACENT TO THE RIGHT OF WAY OR WITHIN A RIGHT OF WAY SHALL MEET THE LOCAL JURISDICTIONAL CRITERIA.

DRIVEWAY TRAFFIC FLOW DIRECTIONAL ARROW

NOT TO SCALE

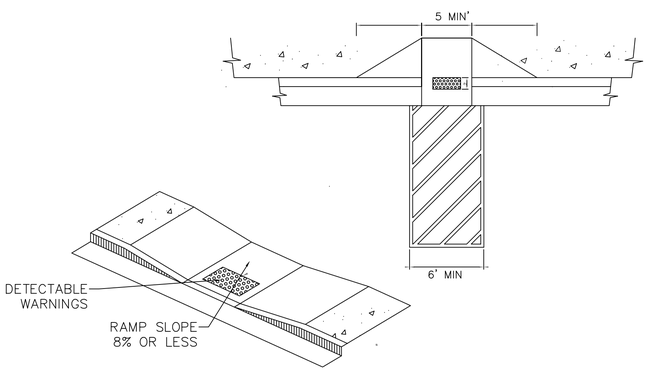

ACCESS RAMP ENTRANCE

NOT TO SCALE

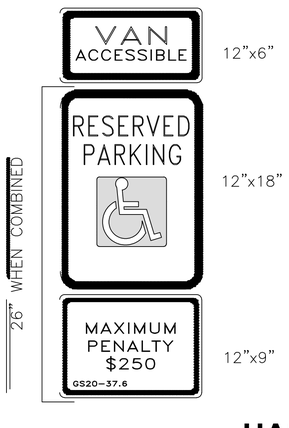

NOTES:
1. SIGN TO BE MOUNTED A MIN. 7' FROM GRADE IF ADJACENT TO PEDESTRIAN PATH ON CHANNELED STEEL POST.

2. PROVIDE CONCRETE FOOTING AT 2-6" BY 1' FOR POST. FOOTING BEGINS MIN. 6" BELOW POST END.

TYPICAL COLOR SCHEME
BACKGROUND – WHITE
LETTERING/BORDER – GREEN
ARROW – GREEN
SYMBOL – WHITE ON BLUE FIELD

CORNER RADIUS = 1-1/2" (TYP.)

HANDICAP SIGN DETAIL

NOT TO SCALE

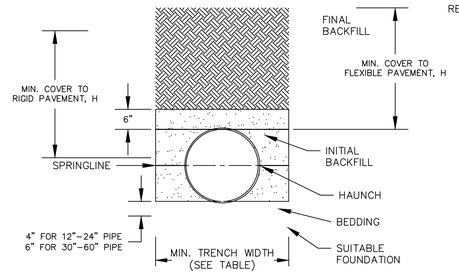

RECOMMENDED MINIMUM TRENCH WIDTHS

PIPE DIAM.	MIN. TRENCH WIDTH
4"	21"
6"	23"
8"	26"
10"	28"
12"	30"
15"	34"
18"	39"
24"	48"
30"	56"
36"	64"
42"	72"
48"	80"
54"	88"
60"	96"

MINIMUM RECOMMENDED COVER BASED ON LOADING CONDITIONS

PIPE DIAM.	SURFACE LIVE LOADING CONDITION	
	H-25	HEAVY CONSTRUCTION (75T AXLE LOAD) *
12" – 48"	12"	48"
54" – 60"	24"	60"

* VEHICLES IN EXCESS OF 75T MAY REQUIRE ADDITIONAL COVER

NOTES:

1. ALL PIPE SYSTEMS SHALL BE INSTALLED IN ACCORDANCE WITH ASTM D2321, "STANDARD PRACTICE FOR UNDERGROUND INSTALLATION OF THERMOPLASTIC PIPE FOR SEWERS AND OTHER GRAVITY FLOW APPLICATIONS", LATEST ADDITION
2. MEASURES SHOULD BE TAKEN TO PREVENT MIGRATION OF NATIVE FINES INTO BACKFILL MATERIAL, WHEN REQUIRED.
3. FOUNDATION: WHERE THE TRENCH BOTTOM IS UNSTABLE, THE CONTRACTOR SHALL EXCAVATE TO A DEPTH REQUIRED BY THE ENGINEER AND REPLACE WITH SUITABLE MATERIAL AS SPECIFIED BY THE ENGINEER. AS AN ALTERNATIVE AND AT THE DISCRETION OF THE DESIGN ENGINEER, THE TRENCH BOTTOM MAY BE STABILIZED USING A GEOTEXTILE MATERIAL.
4. BEDDING: SUITABLE MATERIAL SHALL BE CLASS I, II OR III. THE CONTRACTOR SHALL PROVIDE DOCUMENTATION FOR MATERIAL SPECIFICATION TO ENGINEER. UNLESS OTHERWISE NOTED BY THE ENGINEER, MINIMUM BEDDING THICKNESS SHALL BE 4" (100mm) FOR 4"-24" (100mm-600mm); 6" (150mm) FOR 30"-60" (750mm-900mm).
5. INITIAL BACKFILL: SUITABLE MATERIAL SHALL BE CLASS I, II OR III IN THE PIPE ZONE EXTENDING NOT LESS THAN 6" ABOVE CROWN OF PIPE. THE CONTRACTOR SHALL PROVIDE DOCUMENTATION FOR MATERIAL SPECIFICATION TO ENGINEER. MATERIAL SHALL BE INSTALLED AS REQUIRED IN ASTM D2321, LATEST EDITION.
6. MINIMUM COVER: MINIMUM COVER, H, IN NON-TRAFFIC APPLICATIONS (GRASS OR LANDSCAPE AREAS) IS 12" FROM THE TOP OF PIPE TO GROUND SURFACE. ADDITIONAL COVER MAY BE REQUIRED TO PREVENT FLOATION. FOR TRAFFIC APPLICATIONS, MINIMUM COVER, H, IS 12" UP TO 48" DIAMETER PIPE AND 24" OF COVER FOR 54"-60" DIAMETER PIPE, MEASURED FROM TOP OF PIPE TO BOTTOM OF FLEXIBLE PAVEMENT OR TO TOP OF RIGID PAVEMENT.

HDPE PIPE INSTALLATION

NOT TO SCALE

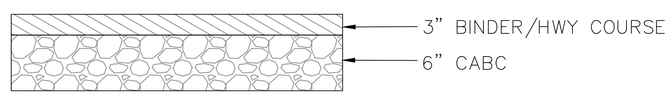

LIGHT DUTY

NOTES:
1. COMPACT GRADED AGGREGATE BASE TO AT LEAST 100% MODIFIED PROCTOR MAX DRY DENSITY.
2. TOP 12" OF EXISTING SUB GRADE COMPACTED TO 98% STANDARD PROCTOR PROOFROLLING SHALL BE PERFORMED WITH AN AXLE OF NO LESS THAN 10 TONS.

PAVEMENT DETAIL SECTIONS 2A, 2B

NOT TO SCALE

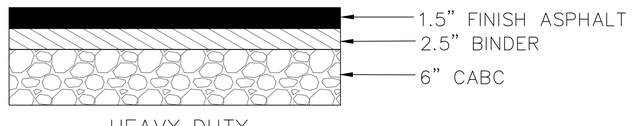

HEAVY DUTY

NOTES:
1. TACK COAT BETWEEN SURFACE AND BINDER COURSES OF FINISH ASPHALT.
2. COMPACT GRADED AGGREGATE BASE TO AT LEAST 100% MODIFIED PROCTOR MAX DRY DENSITY.
3. TOP 12" OF EXISTING SUB GRADE COMPACTED TO 98% STANDARD PROCTOR PROOFROLLING SHALL BE PERFORMED WITH AN AXLE OF NO LESS THAN 10 TONS.

PAVEMENT DETAIL SECTIONS 1A, 1B, 3

NOT TO SCALE

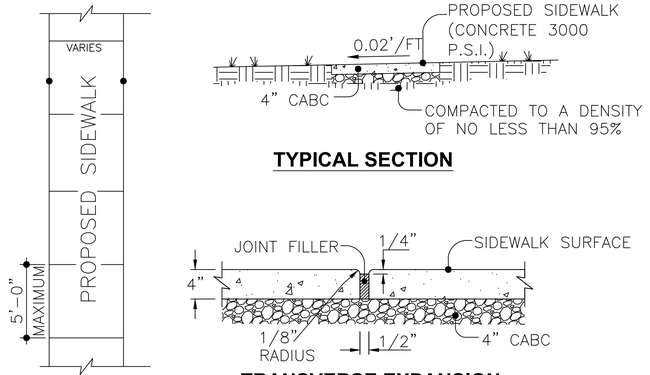

TYPICAL SECTION

TRANSVERSE EXPANSION JOINT

NOTES:

1. TRANSVERSE EXPANSION JOINTS TO BE A MAXIMUM OF 50 FEET.

2. ALL CONCRETE TO BE FINISHED WITH CURING COMPOUND.

3. A 6 INCH DEPTH IS REQUIRED AT LOCATIONS OF DRIVEWAY CROSSINGS, AT STREET INTERSECTIONS (ALONG THE LENGTH OF RADIUS CURB RETURNS), AND IN THE HANDICAP RAMPS.

STANDARD SIDEWALK DETAIL

NOT TO SCALE

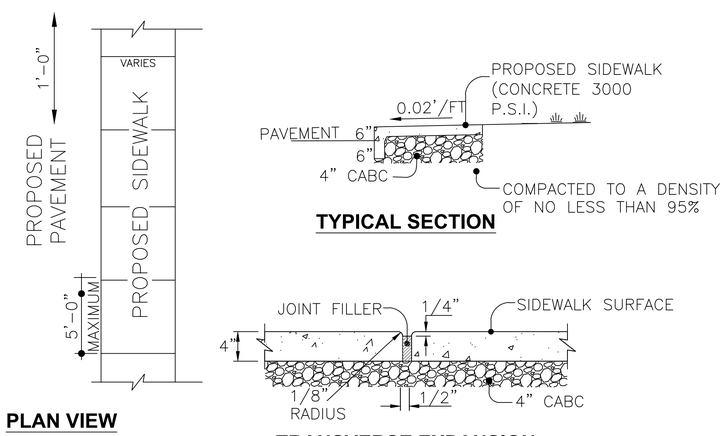

PLAN VIEW

TYPICAL SECTION

TRANSVERSE EXPANSION JOINT

NOTES:

1. TRANSVERSE EXPANSION JOINTS TO BE A MAXIMUM OF 50 FEET.

2. ALL CONCRETE TO BE FINISHED WITH CURING COMPOUND.

3. A 6 INCH DEPTH IS REQUIRED AT LOCATIONS OF DRIVEWAY CROSSINGS, AT STREET INTERSECTIONS (ALONG THE LENGTH OF RADIUS CURB RETURNS), AND IN THE HANDICAP RAMPS.

4. CONCRETE SHALL BE 3000 PSI.

TURNDOWN SIDEWALK DETAIL

NOT TO SCALE

IEC

WARREN CONSULTING & DESIGN, PLLC
850 9th Ave NW HICKORY, NC P-1005

NORTH CAROLINA PROFESSIONAL ENGINEER SEAL 036360 WARREN PATRICK 4/19/25

REVISIONS DATE

PREPARED FOR: BLUE RIDGE CONSERVANCY

BOONE GORGE PARK
CONSTRUCTION DETAILS
MIDDLE FORK GREENWAY
WATAUGA COUNTY, NC

SHEET C6.6

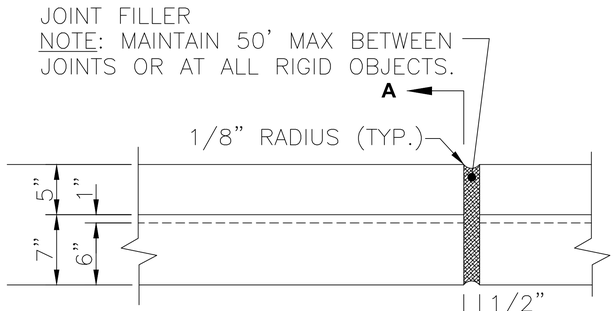

FRONT ELEVATION

TRANSVERSE EXPANSION JOINT

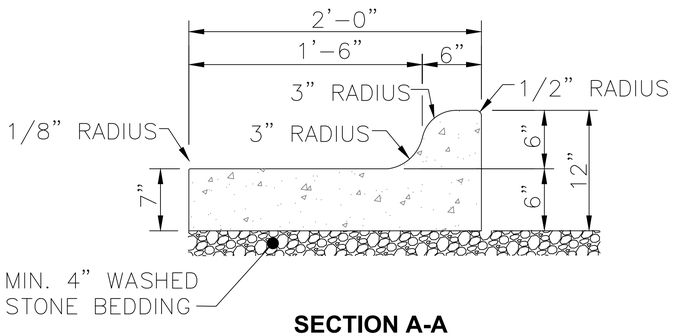

SECTION A-A

SIDE ELEVATION

NOTES:

1. CONCRETE SHALL BE 3,000 P.S.I.
2. CONTRACTION JOINTS SHALL BE SPACED AT 10' INTERVALS.
   (A 15' SPACING WILL BE ALLOWED WHEN A MACHINE IS USED.)
3. FINISH ALL CONCRETE WITH CURING COMPOUND.

24" CURB AND GUTTER DETAIL

NOT TO SCALE

INTERMEDIATE TYPE (4'X4')

(5 FEET TO 20 FEET IN DEPTH)

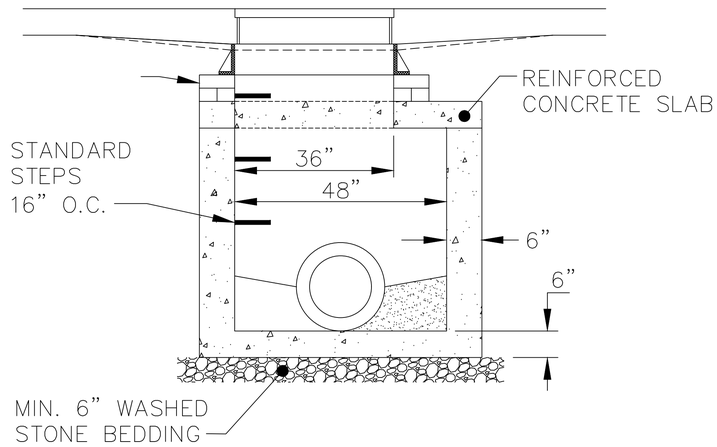

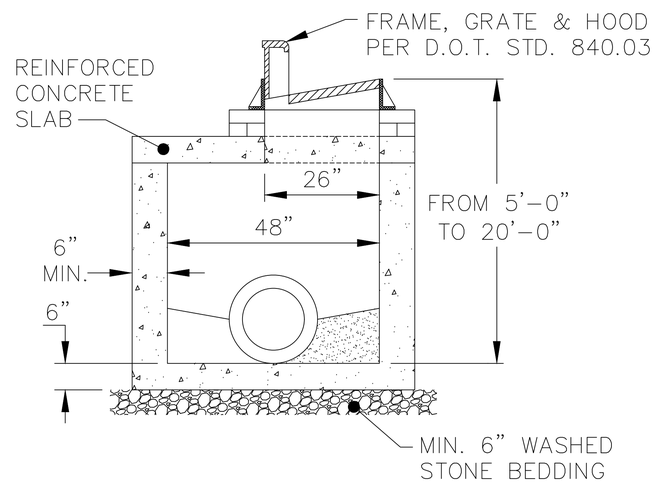

SLAB DETAIL

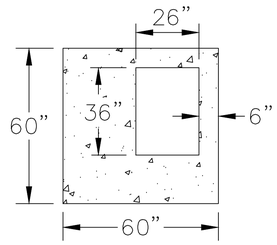

SLAB THICKNESS AND REINFORCEMENT FOR SOIL AND TRAFFIC LOADING BY AN ENGINEER

SHALLOW TYPE

(5 FEET OR LESS IN DEPTH)

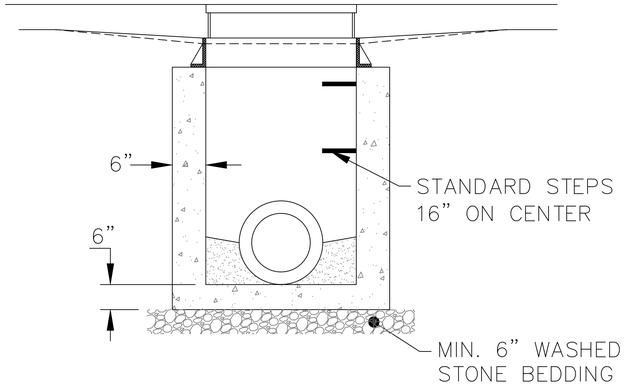

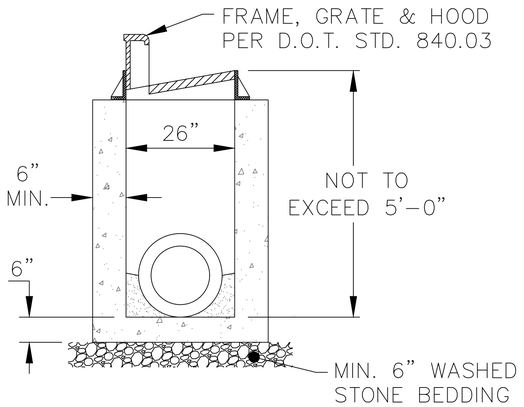

NOTES:

1. CONCRETE SHALL BE 4000 P.S.I. MINIMUM FOR ALL PRECAST CONCRETE CATCH BASINS.
2. PRECAST CONCRETE STRUCTURES MAY ONLY BE INSTALLED TO DEPTHS CERTIFIED AS ACCEPTABLE BY THE MANUFACTURER.
3. "WAFFLE" BOXES ARE ACCEPTABLE FOR SHALLOW TYPE CATCH BASINS.
4. BRICK MAY BE USED TO ADJUST FRAME, GRATE & HOOD TO SURFACE ELEVATION A MAXIMUM OF 12 INCHES.

STANDARD CATCH BASIN

NOT TO SCALE

IEC

WARREN CONSULTING & DESIGN, PLLC
850 9th Ave NW HICKORY, NC P-1005

NORTH CAROLINA PROFESSIONAL ENGINEER SEAL 036361 PATRICK WARREN
4/7/25

DATE

REVISIONS

PREPARED FOR: BLUE RIDGE CONSERVANCY

BOONE GORGE PARK
CONSTRUCTION DETAILS
MIDDLE FORK GREENWAY
WATAUGA COUNTY, NC

SHEET
C6.7

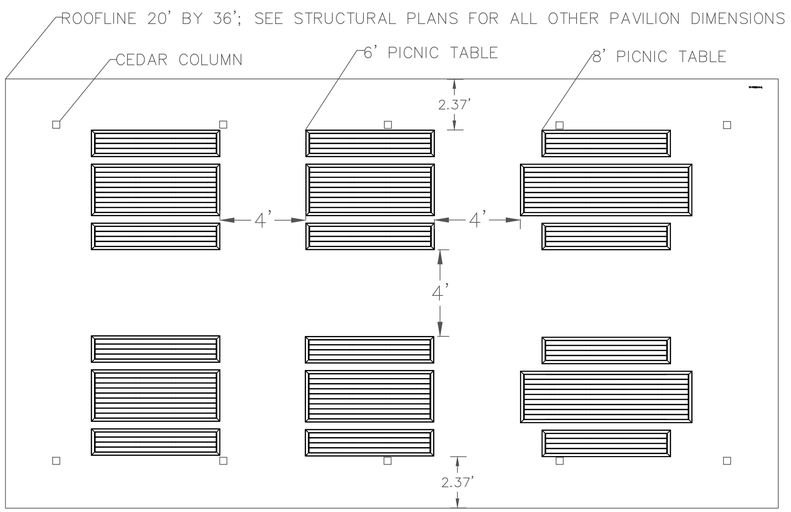

AMENITY LAYOUT AT PAVILION

NOT TO SCALE

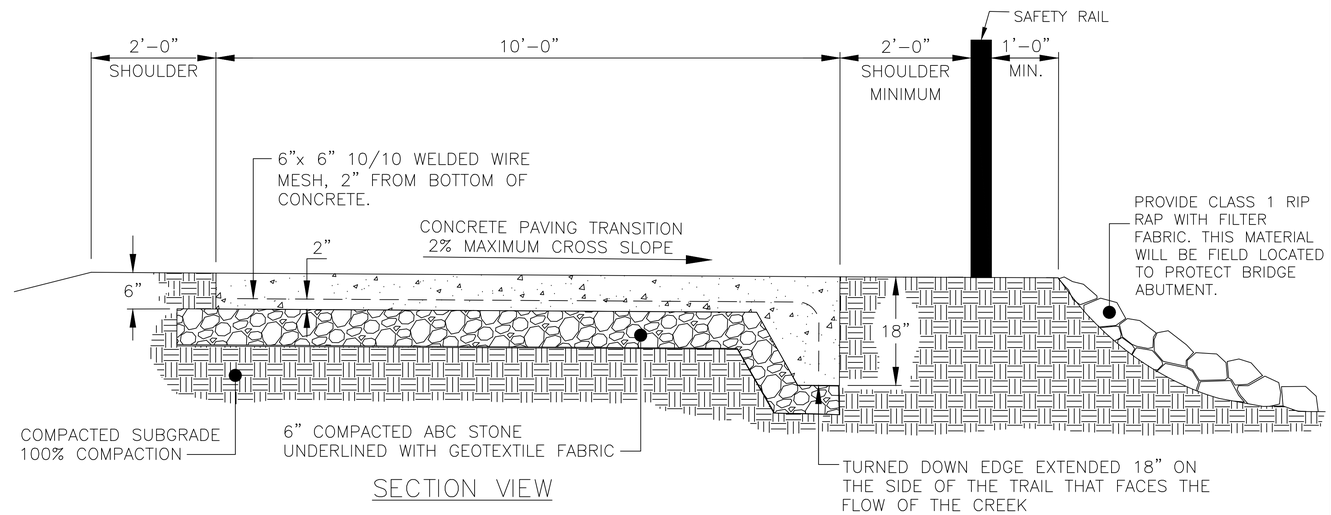

SECTION VIEW

STANDARD GREENWAY TURNDOWN EDGE

NOT TO SCALE

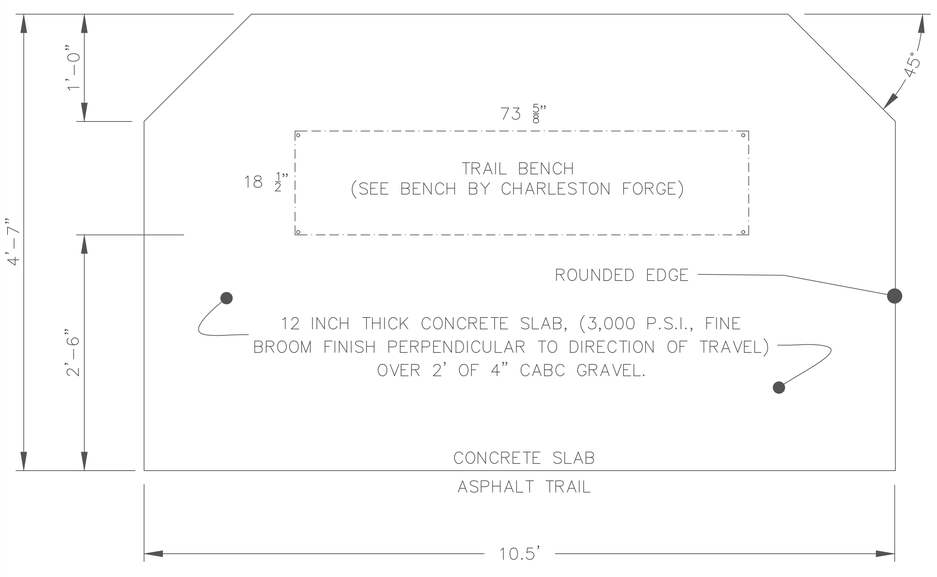

PLAN VIEW

STANDARD CONCRETE SLAB FOR TRAIL BENCH

NOT TO SCALE

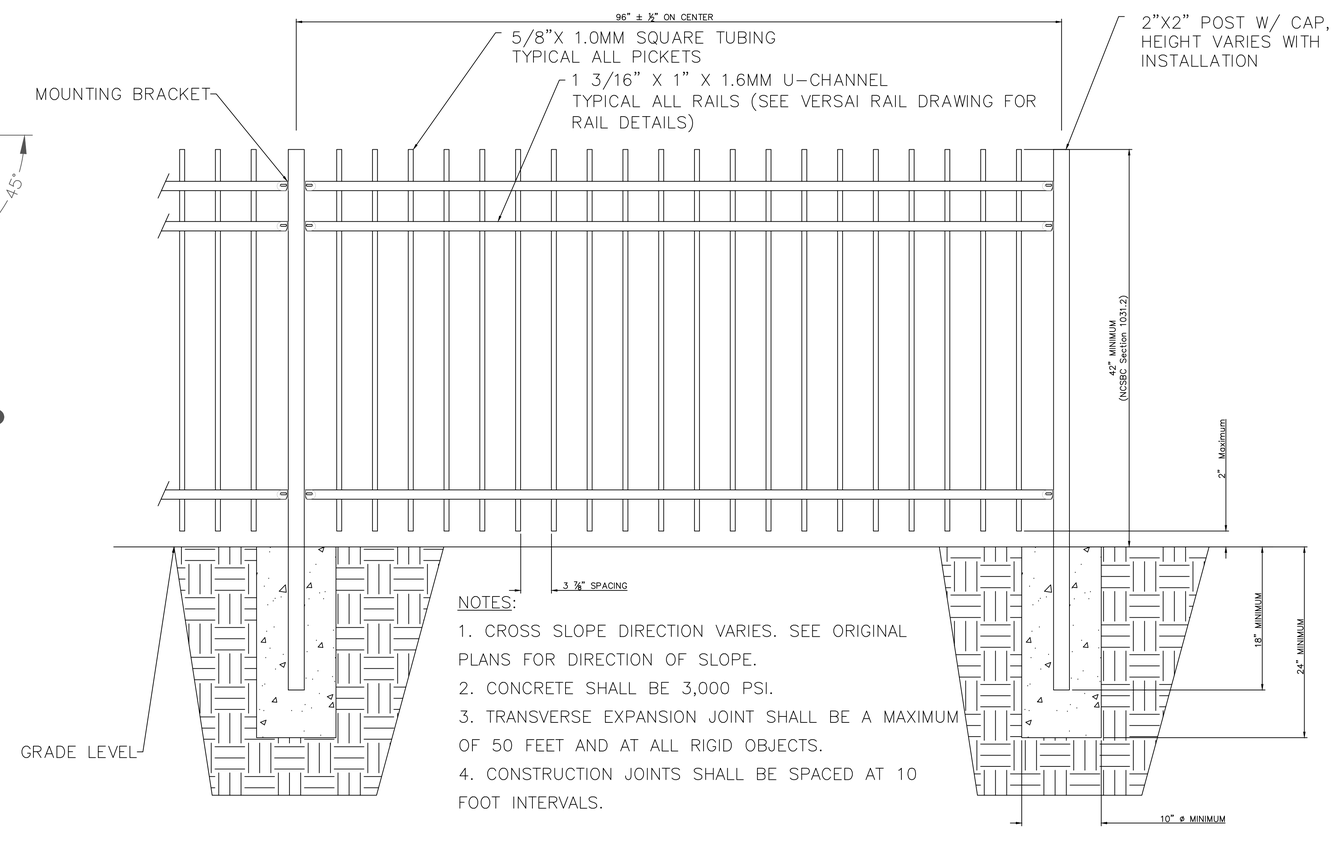

NOTES:

1. CROSS SLOPE DIRECTION VARIES. SEE ORIGINAL PLANS FOR DIRECTION OF SLOPE.
2. CONCRETE SHALL BE 3,000 PSI.
3. TRANSVERSE EXPANSION JOINT SHALL BE A MAXIMUM OF 50 FEET AND AT ALL RIGID OBJECTS.
4. CONSTRUCTION JOINTS SHALL BE SPACED AT 10 FOOT INTERVALS.

SECURITY FENCE

NOT TO SCALE

IEC

WARREN CONSULTING & DESIGN, PLLC
850 9th Ave NW HICKORY, NC P-1005

NORTH CAROLINA PROFESSIONAL ENGINEER SEAL 036360 PATRICK WARREN 4/17/25

REVISIONS DATE

PREPARED FOR: BLUE RIDGE CONSERVANCY

BOONE GORGE PARK
CONSTRUCTION DETAILS
MIDDLE FORK GREENWAY
WATAUGA COUNTY, NC

SHEET
C6.8

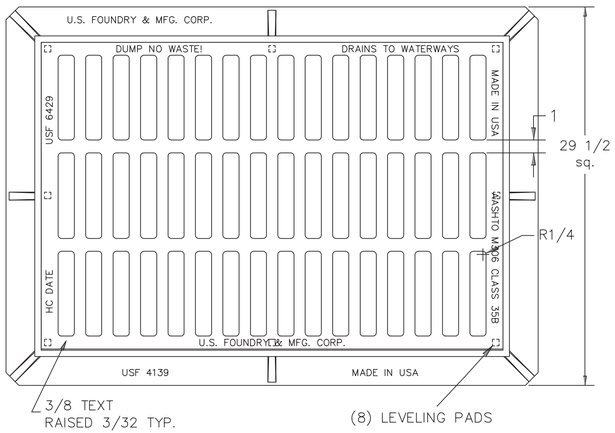

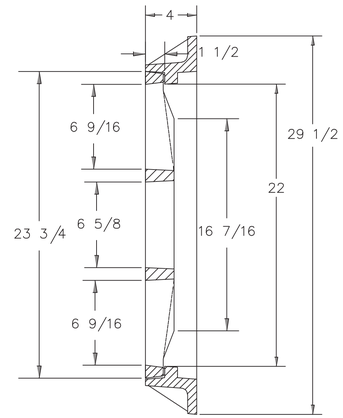

NOTES:
FRAME IS REVERSIBLE.
CLASSIFICATION: HEAVY DUTY

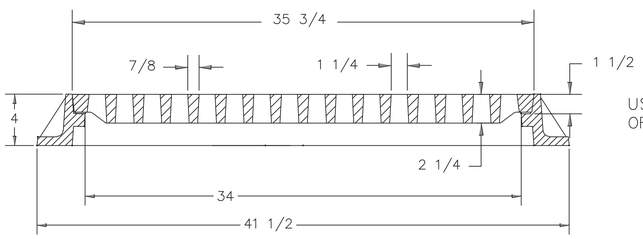

USF 4139 FRAME & 6429 GRATE
OR APPROVED EQUAL

24"X36" STANDARD DROP INLET FRAME AND GRATES

NOT TO SCALE

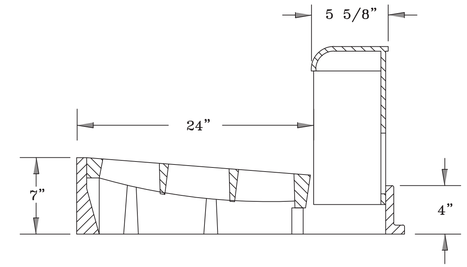

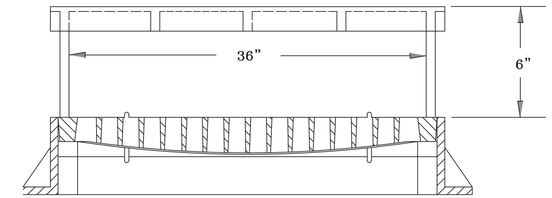

NOTES:
1. GRATES, FRAMES, AND HOODS SHALL BE IN ACCORDANCE WITH NCDOT STANDARD 840.02 AND 840.03

2. EMBOSS WITH "DUMP NO WASTE ! DRAINS TO WATERWAYS."

3. USE DIRECTIONAL GRATES WHEN DIRECTED.

4. U.S FOUNDRY CURB HOOD, FRAME, AND GRATE #5181-6420, 6425, or 6430 or APPROVED EQUAL.

STANDARD CONCRETE FRAME AND GRATE

NOT TO SCALE

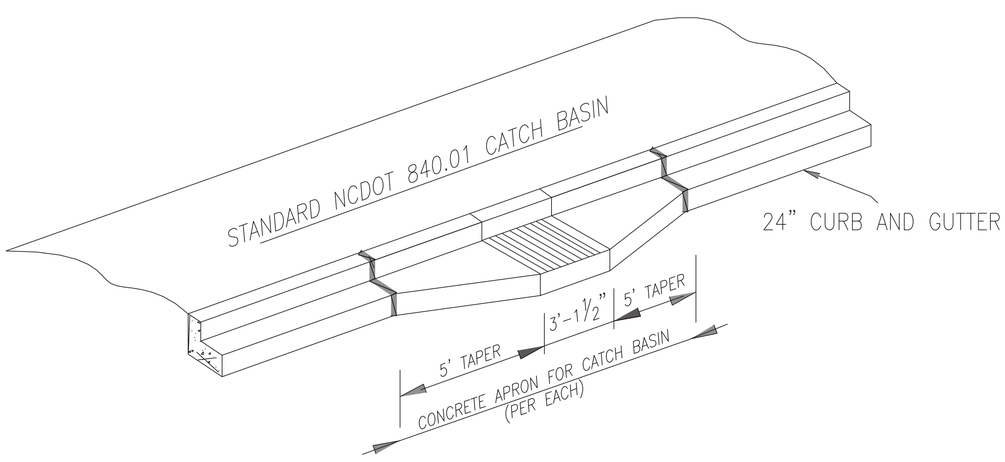

CURB AND GUTTER TRANSITION AT INLETS-
STANDARD CURB AND GUTTER

NOT TO SCALE

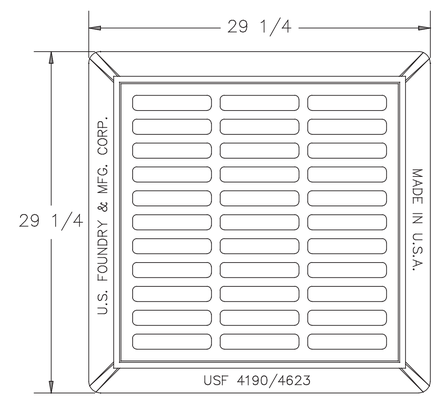

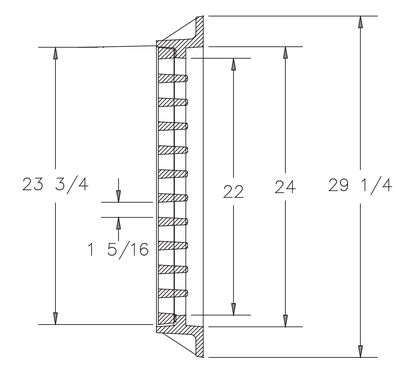

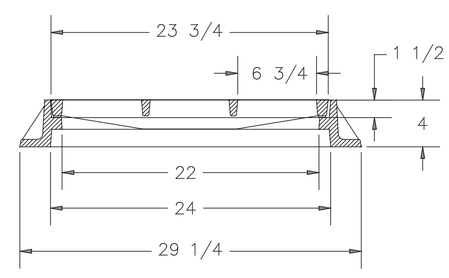

NOTES:
1- MATERIAL: ASTM-A48
CLASS 35B GRAY IRON.
2- FRAME WT: 125 LBS. APP.
3- GRATE WT: 115 LBS. APP.

USF 4190 FRAME & 6259 GRATE
OR APPROVED EQUAL

24"X 24" STANDARD DROP INLET FRAME AND GRATE

NOT TO SCALE

IEC

WARREN CONSULTING & DESIGN, PLLC
850 9th Ave NW HICKORY, NC P-1005

NORTH CAROLINA PROFESSIONAL ENGINEER SEAL 036386 PATRICK WARREN 4/19/22

REVISIONS DATE

PREPARED FOR: BLUE RIDGE CONSERVANCY

BOONE GORGE PARK
TRAIL SECTION 3 - LANDSCAPE
MIDDLE FORK GREENWAY
WATAUGA COUNTY, NC

SHEET
C6.10

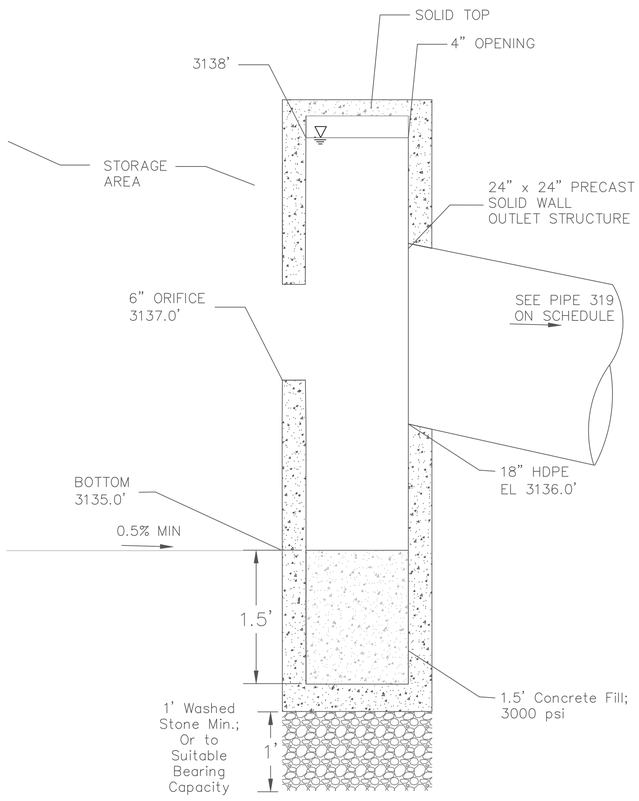

PERM WETLAND OUTLET STRUCTURE

DRAINAGE STRUCTURE & PIPE SCHEDULE

NOTES: ALL ELEVATIONS ARE ASSUMED. CONTRACTOR TO FIELD VERIFY & PROVIDE POSITIVE FLOW. PIPES OVER 10% TO HAVE CONCRETE COLLARS AT EACH JOINT.

STRUCTURE	RIM/FLOW	INV IN	INV OUT	SIZE	PIPE	PIPE SIZE	LENGTH	SLOPE	NOTES
100	3173.00'	--	3172.00'	2'X2'	101	6" PVC SC40	44.00'	2.00%	GRATE INLET
102	3173.25	--	3172.00'	2'X2'	103	6" PVC SC40	22.50'	2.25%	GRATE INLET
104	3172.25'	3171.10' (101) 3171.50' (103)	3165.00'	2'X2'	105	12" HDPE	20.00'	3.00%	GRATE INLET
200	3176.10'	3173.15'	3167.00'	2'X2'	201	12" HDPE	40.00'	5.00%	CUT THROAT INLET
202	3176.40'	3173.70'	3173.50'	2'	203	12" HDPE	17.50'	2.00%	CURB INLET
204	3175.91'		3174.00'	2'	205	12" HDPE	15.00'	2.00%	CURB INLET
300	3174.80'	--	3173.30'	2'X2'	301	6" PVC SC40	32.50'	2.50%	GRATE INLET
302	3172.50'	--	3171.00'	2'X2'	303	12" HDPE	52.00'	1.90%	GRATE INLET
304	3173.77'	3170.00 (303)	3172.22'	2x3'	305	12" HDPE	114.00'	2.80%	GRATE INLET
306	3176.20'	3169.00'	3168.50'	2x3'	307	12" HDPE	48.00'	2.00%	GRATE INLET
308	3174.00'	--	3172.50'	2'X2'	309	12" HDPE	112.50'	2.00%	GRATE INLET
310	3174.00'	3170.25 (309) 3171.00 (313)	3163.50'	2'X2'	311	24" HDPE	40.50'	2.50%	
312	3150.50'	--	3148.00'	3'X3'	313	24" HDPE	89.00'	1.10%	CUT THROAT INLET
314	3146.00' (Rim) 3145.50' (ESC Orifice)	--	3145.00'	3'X3'	315	24" HDPE	160.00'	1.80%	RISER SPILLWAY INLET
400	3160.40'	--	3159.80'	2'X2'	401	6" PVC SC40	20.00'	1.75%	GRATE YARD INLET
500	3159.80'	--	3159.25'	2'X2'	501	6" PVC SC40	44	1.50%	GRATE YARD INLET
600	3159.30'	--	3158.70'	2'X2'	601	6" PVC SC40	20	1.50%	GRATE YARD INLET
--	--	--	--	--	701	30" HDPE	20	3.00%	--
--	--	--	--	--	801	18" HDPE	20	5.00%	--
904	3253.50'	--	3251.00'	4'X4'	905	24" HDPE	50	2.60%	CUT THROAT INLET

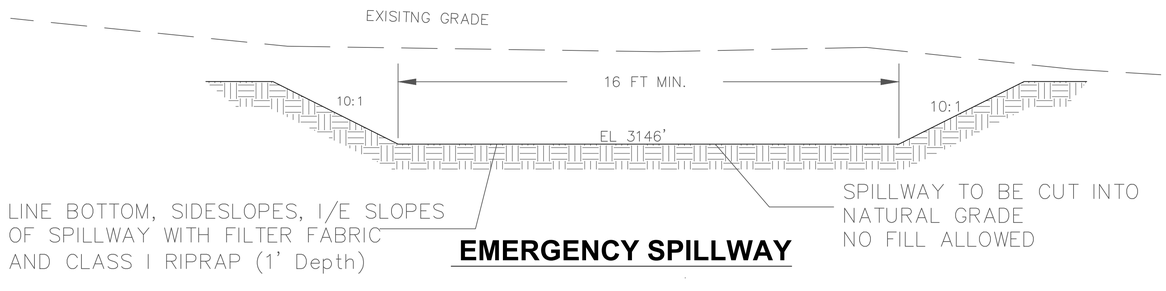

EMERGENCY SPILLWAY

IEC

WARREN CONSULTING & DESIGN, PLLC
850 9th Ave NW HICKORY, NC P-1005

NORTH CAROLINA PROFESSIONAL ENGINEER SEAL 036386 RICHARD WARREN 4/14/25

REVISIONS DATE

PREPARED FOR: BLUE RIDGE CONSERVANCY

BOONE GORGE PARK
CONSTRUCTION DETAILS
MIDDLE FORK GREENWAY
WATAUGA COUNTY, NC

SHEET C6.11

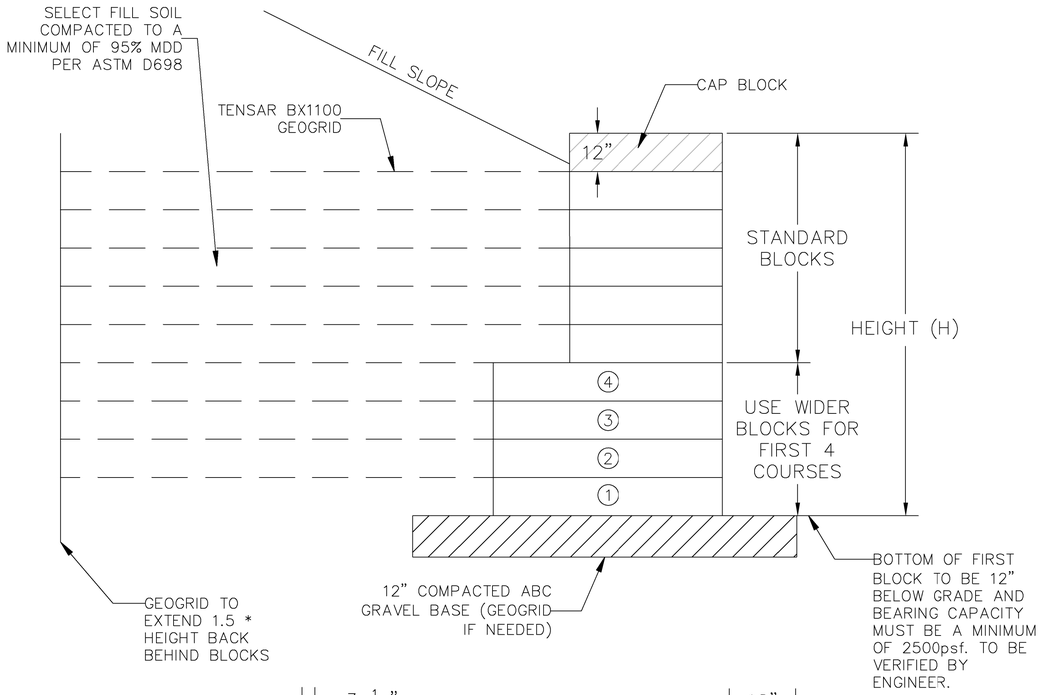

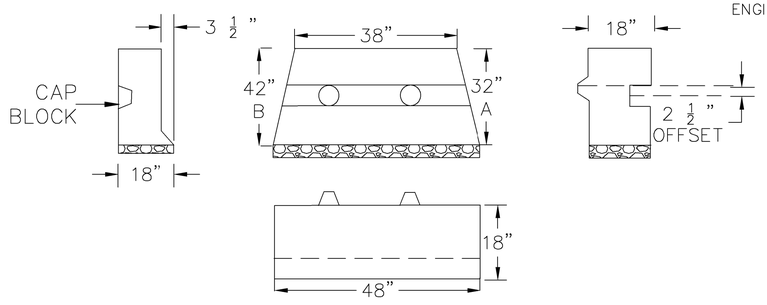

TYPICAL LOVEN-BLOCK RETAINING WALL DETAIL

NTS

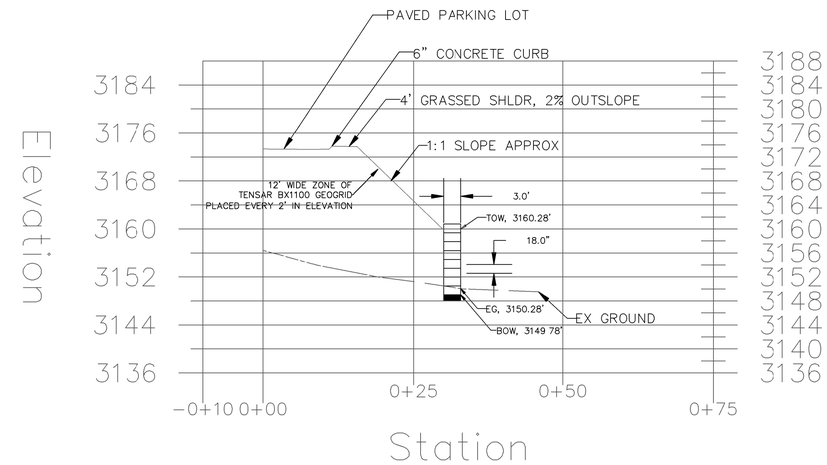

TYPICAL LOVEN BLOCK w/REINFORCED SLOPE
RETAINING WALL #3, STA 0+94.16

NOTES:
1. USE 12" OF COMPACTED ABC GRAVEL FOR A BASE; SUBGRADE MUST HAVE A MINIMUM OF 2,500psf BEARING CAPACITY
2. BOTTOM OF FIRST BLOCK TO BE 12" BELOW GRADE
3. USE WIDER BLOCKS FOR THE FIRST 4 COURSES
4. USE CAP BLOCK FOR TOP COURSE
5. GEOGRID LENGTH TO BE 1.5 x WALL HEIGHT
6. START FILL SLOPE 12" DOWN FROM THE BACK OF CAP BLOCK

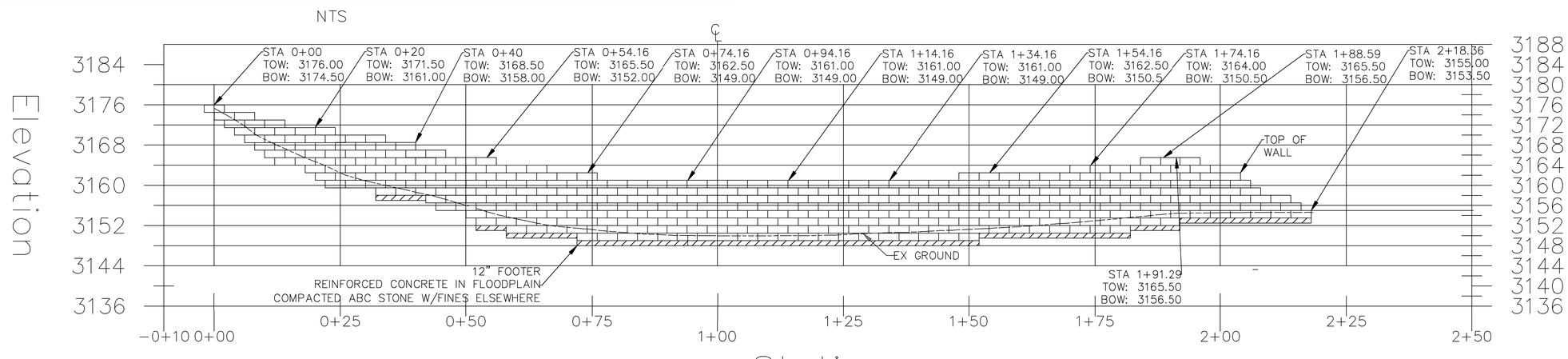

RETAINING WALL #3 – PROFILE

IEC
Solid Rock Engineering, PLLC.
577 George Wilson Rd, Suyite 5
Boone, NC 28607 P-1523

NORTH CAROLINA PROFESSIONAL SEAL 20450 ENGINEER JEFFREY D. HOLCHIN
3/27/25

REVISIONS DATE

PREPARED FOR: BLUE RIDGE CONSERVANCY

BOONE GORGE PARK
CONSTRUCTION DETAILS
MIDDLE FORK GREENWAY
WATAUGA COUNTY, NC

SHEET C6.12

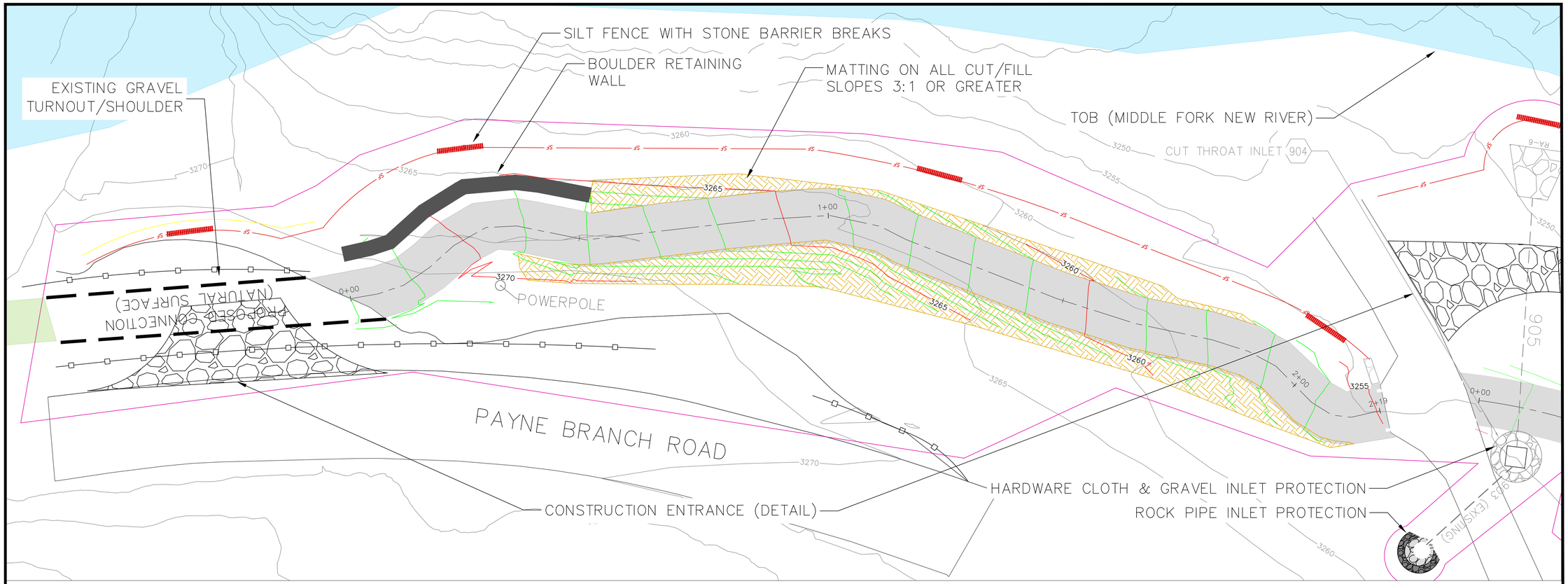

SEQUENCE OF CONSTRUCTION – SECTION 1 (A,B) TRAIL

1. OBTAIN APPROVAL OF EROSION CONTROL PLAN FROM NCDEQ LAND QUALITY SECTION, WINSTON SALEM REGIONAL OFFICE.
2. NOTIFY THE NCDEQ LAND QUALITY INSPECTOR AT LEAST 48 HOURS BEFORE PROJECT STARTS.
3. NO MAJOR GRADING ACTIVITIES OR BASIN CONSTRUCTION ARE TO TAKE PLACE DURING WET WEATHER OR PERIODS OF PREDICTED WET WEATHER.
4. MARK ALL EXISTING UTILITIES AT THE PROJECT SITE. MAINTAIN MARKINGS FOR THE DURATION OF CONSTRUCTION.
5. ESTABLISH CONSTRUCTION ENTRANCE AT EXISTING EDGE OF PAVEMENT ALONG PAYNE BRANCH ROAD. INSTALL ALL SILT FENCING AND STONE BARRIER BREAKS FOR THE SECTION 1 PROJECT AREA. ESTABLISH CONSTRUCTION ENTRANCE AND ROAD FROM THE PRIVATE DRIVEWAY TO STAGING AND STOCKPILE AREAS.
6. INSTALL ROCK PIPE INLET PROTECTION AT PIPE 903, INSTALL CUT THROAT INLET 904 WITH HARDWARE CLOTH AND GRAVEL PROTECTION, AND PIPE 905 WITH THE CORRESPONDING RIPRAP APRON.
6. ROUGH GRADE TRAIL SECTION 1B: STA 0+00 – 2+81 AND INSTALL THE ADJACENT PERMANENT DIVERSION 1 (PD–1) W/ STABILIZATION MATTING/SEED AND CORRESPONDING RIPRAP APRON.
7. USE CONSTRUCTION ACCESS FROM PRIVATE DRIVEWAY FOR CRANE AND CONCRETE TRUCK TO BRIDGE 1 SITE. SAW CUT TO REMOVE EXISTING PEDESTALS AND METAL FLUME.
8. INSTALL TEMPORARY STREAM CROSSING (FORD– SEE DETAIL), AS PERMITTED BY 401/404, AT THE SITE OF BRIDGE 1. THIS ACCESS IS TO BE USED TO TRANSPORT MATERIALS FOR, AND TO INSTALL THE ABUTMENT FOR BRIDGE 1 ON RIVER LEFT (ASIDE FROM CONCRETE POUR). NO CONSTRUCTION EQUIPMENT IS ALLOWED IN THE STREAMBED ASIDE FROM DESIGNATED TEMPORARY STREAM CROSSING (FORD).
9. INSTALL CONCRETE ABUTMENTS FOR BRIDGE 1 WITH ADJACENT WATTLE BARRIER PROTECTION IN PLACE PRIOR TO FORM AND POUR. CONCRETE SHALL BE POURED FOR THE RIVER LEFT ABUTMENT USING A PUMP ARM FROM THE RIVER RIGHT STREAM BANK.
10. DECOMMISSION STREAM CROSSING (FORD) ONCE ABUTMENTS ARE INSTALLED. INSTALL BRIDGE 1 VIA CRANE.
11. MAKE ANY REPAIRS NECESSARY TO ROUGH GRADING OF SECTION 1B. ROUGH GRADE SECTION 1A: STA 0+00 – 2+19. PAVE SECTIONS 1A AND 1B. STABILIZE ALL DISTURBED AREAS WITH TEMPORARY/PERMANENT SEEDING AND MATTING AS SPECIFIED WITHIN ESC TIMELINES.
12. STOCKPILE SOIL/TOPSOIL ON–SITE AS NECESSARY AND/OR REMOVE OFF–SITE TO APPROVED SITE (SEE MATERIAL NOTES).
13. ALL EROSION CONTROL MEASURES TO BE MAINTAINED DURING THE CONSTRUCTION PERIOD. MAKE NECESSARY REPAIRS AS REQUIRED AND/OR AS DIRECTED BY THE ENGINEER.

LEGEND

- 1' CONTOUR (EXISTING)
- 5' CONTOUR (EXISTING)
- 1' CONTOUR (PROPOSED)
- 5' CONTOUR (PROPOSED)
- FEMA FLOODWAY
- PARCEL BOUNDARY
- TRAIL CENTERLINE ALIGNMENT
- AQUATIC FEATURES (EXTENT = TOP OF BANK)
- PAVED TRAIL
- BOARDWALK
- PROPOSED PIPE
- DIVERSION DITCH
- SLOPE MATTING
- SILT FENCE
- STONE BARRIER BREAK
- STONE APRON
- LIMITS OF DISTURBANCE
- HARDWARE CLOTH AND GRAVEL INLET PROTECTION
- GRADE DIP
- CONSTRUCTION ACCESS
- BOULDER RETAINING WALL

SCALE: 1"=10'

PREPARED BY:
INTERFACE ENVIRONMENTAL CONSULTING, LLC
476 HIDDEN POND ROAD
BOONE, NC 28607
919-656-4543

REVISIONS | DATE

PREPARED FOR: BLUE RIDGE CONSERVANCY

BOONE GORGE PARK ESC
TRAIL SECTION 1A
MIDDLE FORK GREENWAY
WATAUGA COUNTY, NC

SHEET X1.0

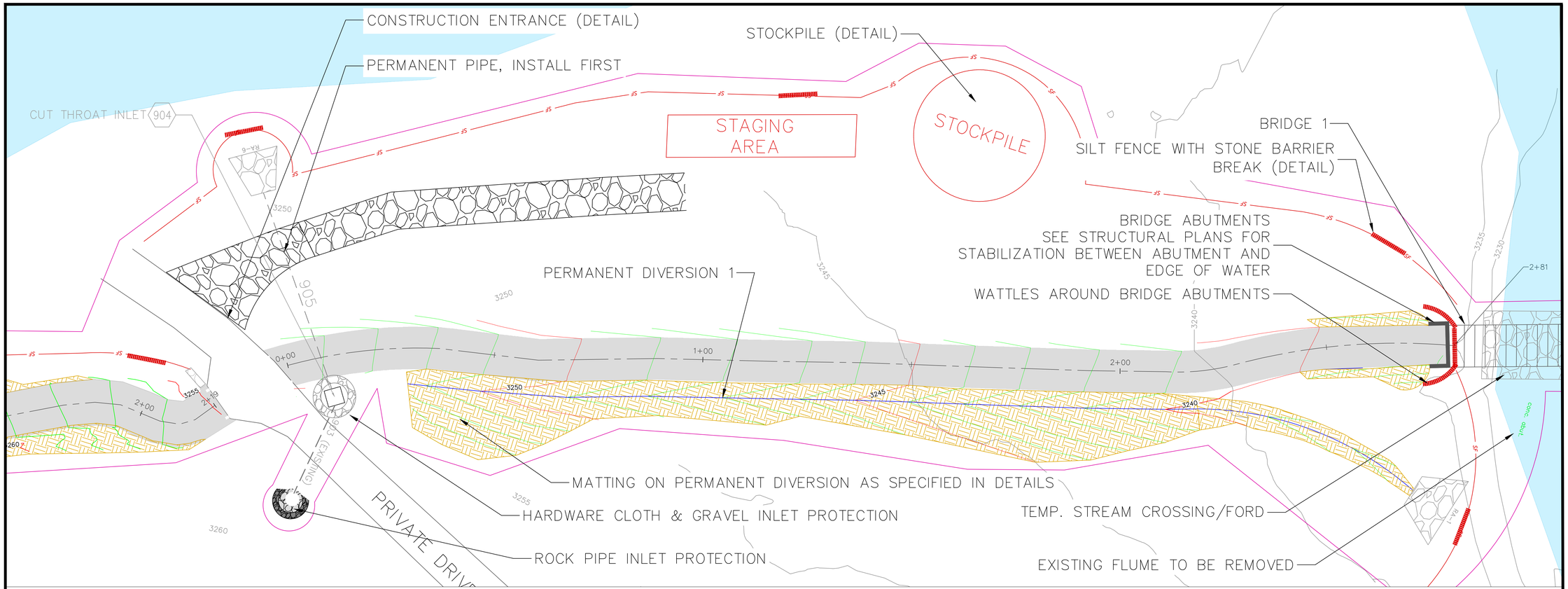

SEQUENCE OF CONSTRUCTION – SECTION 1 (A,B) TRAIL

1. OBTAIN APPROVAL OF EROSION CONTROL PLAN FROM NCDEQ LAND QUALITY SECTION, WINSTON SALEM REGIONAL OFFICE.
2. NOTIFY THE NCDEQ LAND QUALITY INSPECTOR AT LEAST 48 HOURS BEFORE PROJECT STARTS.
3. NO MAJOR GRADING ACTIVITIES OR BASIN CONSTRUCTION ARE TO TAKE PLACE DURING WET WEATHER OR PERIODS OF PREDICTED WET WEATHER.
4. MARK ALL EXISTING UTILITIES AT THE PROJECT SITE. MAINTAIN MARKINGS FOR THE DURATION OF CONSTRUCTION.
5. ESTABLISH CONSTRUCTION ENTRANCE AT EXISTING EDGE OF PAVEMENT ALONG PAYNE BRANCH ROAD. INSTALL ALL SILT FENCING AND STONE BARRIER BREAKS FOR THE SECTION 1 PROJECT AREA. ESTABLISH CONSTRUCTION ENTRANCE AND ROAD FROM THE PRIVATE DRIVEWAY TO STAGING AND STOCKPILE AREAS.
6. INSTALL ROCK PIPE INLET PROTECTION AT PIPE 903, INSTALL CUT THROAT INLET 904 WITH HARDWARE CLOTH AND GRAVEL PROTECTION, AND PIPE 905 WITH THE CORRESPONDING RIPRAP APRON.
6. ROUGH GRADE TRAIL SECTION 1B: STA 0+00 – 2+81 AND INSTALL THE ADJACENT PERMANENT DIVERSION 1 (PD–1) W/ STABILIZATION MATTING/SEED AND CORRESPONDING RIPRAP APRON.
7. USE CONSTRUCTION ACCESS FROM PRIVATE DRIVEWAY FOR CRANE AND CONCRETE TRUCK TO BRIDGE 1 SITE. SAW CUT TO REMOVE EXISTING PEDESTALS AND METAL FLUME.
8. INSTALL TEMPORARY STREAM CROSSING (FORD– SEE DETAIL), AS PERMITTED BY 401/404, AT THE SITE OF BRIDGE 1. THIS ACCESS IS TO BE USED TO TRANSPORT MATERIALS FOR, AND TO INSTALL THE ABUTMENT FOR BRIDGE 1 ON RIVER LEFT (ASIDE FROM CONCRETE POUR). NO CONSTRUCTION EQUIPMENT IS ALLOWED IN THE STREAMBED ASIDE FROM DESIGNATED TEMPORARY STREAM CROSSING (FORD).
9. INSTALL CONCRETE ABUTMENTS FOR BRIDGE 1 WITH ADJACENT WATTLE BARRIER PROTECTION IN PLACE PRIOR TO FORM AND POUR. CONCRETE SHALL BE POURED FOR THE RIVER LEFT ABUTMENT USING A PUMP ARM FROM THE RIVER RIGHT STREAM BANK.
10. DECOMMISSION STREAM CROSSING (FORD) ONCE ABUTMENTS ARE INSTALLED. INSTALL BRIDGE 1 VIA CRANE.
11. MAKE ANY REPAIRS NECESSARY TO ROUGH GRADING OF SECTION 1B. ROUGH GRADE SECTION 1A: STA 0+00 – 2+19. PAVE SECTIONS 1A AND 1B. STABILIZE ALL DISTURBED AREAS WITH TEMPORARY/PERMANENT SEEDING AND MATTING AS SPECIFIED WITHIN ESC TIMELINES.
12. STOCKPILE SOIL/TOPSOIL ON–SITE AS NECESSARY AND/OR REMOVE OFF–SITE TO APPROVED SITE (SEE MATERIAL NOTES).
13. ALL EROSION CONTROL MEASURES TO BE MAINTAINED DURING THE CONSTRUCTION PERIOD. MAKE NECESSARY REPAIRS AS REQUIRED AND/OR AS DIRECTED BY THE ENGINEER.

LEGEND

- 1' CONTOUR (EXISTING)
- 5' CONTOUR (EXISTING)
- 1' CONTOUR (PROPOSED)
- 5' CONTOUR (PROPOSED)
- FEMA FLOODWAY
- PARCEL BOUNDARY
- TRAIL CENTERLINE ALIGNMENT
- AQUATIC FEATURES (EXTENT = TOP OF BANK)
- PAVED TRAIL
- BOARDWALK
- PROPOSED PIPE
- DIVERSION DITCH
- SLOPE MATTING
- SILT FENCE
- STONE BARRIER BREAK
- STONE APRON
- LIMITS OF DISTURBANCE
- HARDWARE CLOTH AND GRAVEL INLET PROTECTION
- GRADE DIP
- CONSTRUCTION ACCESS
- BOULDER RETAINING WALL

SCALE: 1"=12'

PREPARED BY:
IEC
INTERFACE ENVIRONMENTAL CONSULTING, LLC
476 HIDDEN POND ROAD
BOONE, NC 28607
919-656-4543

REVISIONS | DATE

PREPARED FOR: BLUE RIDGE CONSERVANCY

BOONE GORGE PARK ESC
TRAIL SECTION 1B
MIDDLE FORK GREENWAY
WATAUGA COUNTY, NC

SHEET X1.1

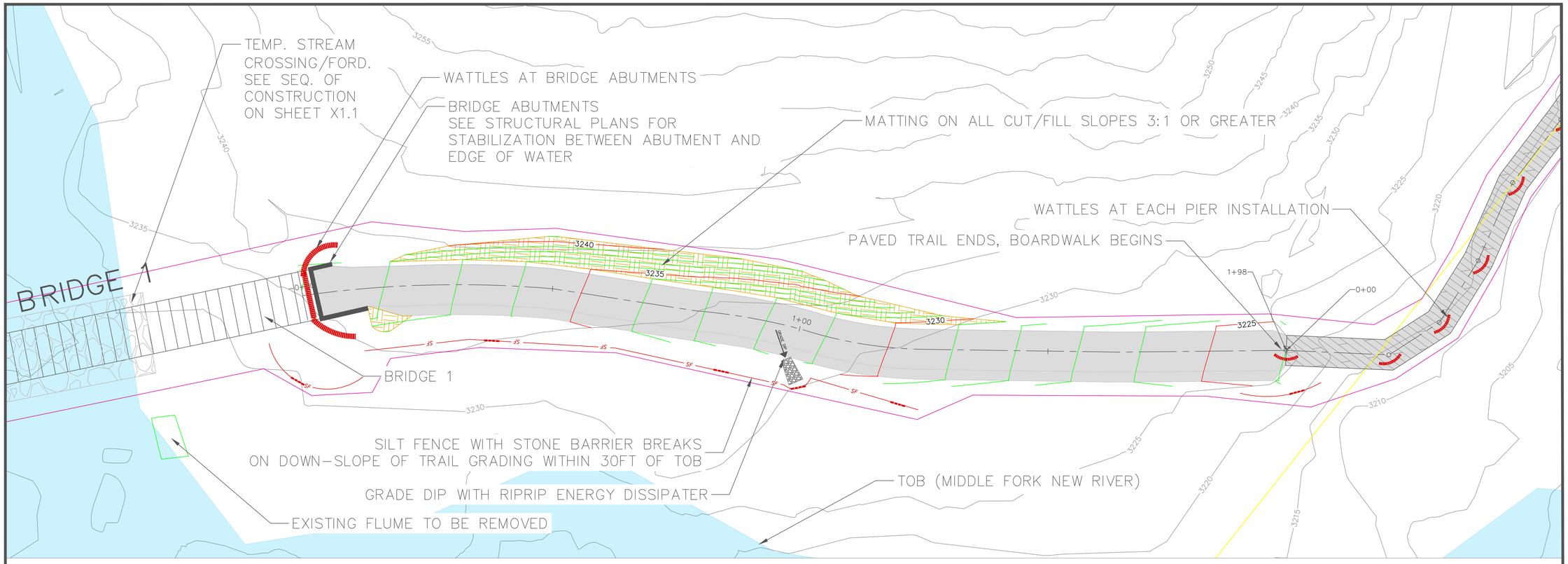

SEQUENCE OF CONSTRUCTION – SECTION 2A TRAIL & BOARDWALK

1. NO MAJOR GRADING ACTIVITIES ARE TO TAKE PLACE DURING WET WEATHER OR PERIODS OF PREDICTED WET WEATHER.
2. USE BRIDGE 1 (NOTE CAPACITY ON STRUCTURAL PLANS) TO ACCESS SECTION 2A TRAIL CONSTRUCTION. THE EXISTING ABUTMENTS FROM THE HISTORICAL FLUME (REMOVED IN SECTION 1B) CAN BE USED TO SUPPORT A TEMPORARY ELEVATED CROSSING (METAL/TIMBER) ABOVE THE WATER SURFACE FOR ADDITIONAL ACCESS AT THE CONTRACTORS' DISCRETION.
3. INSTALL SILT FENCE WITH STONE BARRIER BREAKS FOR SECTION 2A TRAIL STATION 0+00 – 1+97.98. ROUGH GRADE TRAIL, INSTALL GRADE DIP WITH CORRESPONDING STONE APRON AND CURLEX. STABILIZE ALL CUT AND FILL SLOPES WITH SEEDING/MATTING WITHIN SPECIFIED TIMELINES.
4. INSTALL BASE LAYER STONE ALONG SECTION 2A TRAIL. USE BRIDGE 1 AND SECTION 2A TRAIL FOR INSTALLATION OF SECTION 2B BOARDWALK.
5. INSTALL SILT FENCE WITH STONE BARRIERS WHERE SPECIFIEID AND WATTLE BARRIERS AT EACH BOARDWALK PIER SET AS CONSTRUCTION PROCEEDS. STABILIZE ANY DISTURBED AREAS WITH MATTING AND TEMPORARY SEED AT THE END OF EACH WORKING DAY.
6. REMOVE FOUR (4) EXISTING CONCRETE PILLARS AT SECTON 2A –BOARDWALK STATION 1+50.
7. REMOVE CURLEX FABRIC AND ACCUMULATED SEDIMENT FROM THE ONE (1) GRADE DIP AND DISPOSE OF OFF-SITE.
8. ALL EROSION CONTROL MEASURES TO BE MAINTAINED DURING THE CONSTRUCTION PERIOD. MAKE NECESSARY REPAIRS AS REQUIRED AND/OR AS DIRECTED BY THE ENGINEER.

LEGEND

- 1' CONTOUR (EXISTING)
- 5' CONTOUR (EXISTING)
- 1' CONTOUR (PROPOSED)
- 5' CONTOUR (PROPOSED)
- FEMA FLOODWAY
- PARCEL BOUNDARY
- TRAIL CENTERLINE ALIGNMENT
- AQUATIC FEATURES (EXTENT = TOP OF BANK)
- PAVED TRAIL
- BOARDWALK
- PROPOSED PIPE
- DIVERSION DITCH
- SLOPE MATTING
- SILT FENCE
- STONE BARRIER BREAK
- STONE APRON
- LIMITS OF DISTURBANCE
- HARDWARE CLOTH AND GRAVEL INLET PROTECTION
- GRADE DIP
- CONSTRUCTION ACCESS
- BOULDER RETAINING WALL

PREPARED BY:
IEC
INTERFACE ENVIRONMENTAL CONSULTING, LLC
476 HIDDEN POND ROAD
BOONE, NC 28607
919-656-4543

REVISIONS	DATE

PREPARED FOR: BLUE RIDGE CONSERVANCY

BOONE GORGE PARK ESC
TRAIL SECTION 2A
MIDDLE FORK GREENWAY
WATAUGA COUNTY, NC

SCALE: 1"=10'

SHEET X2.0

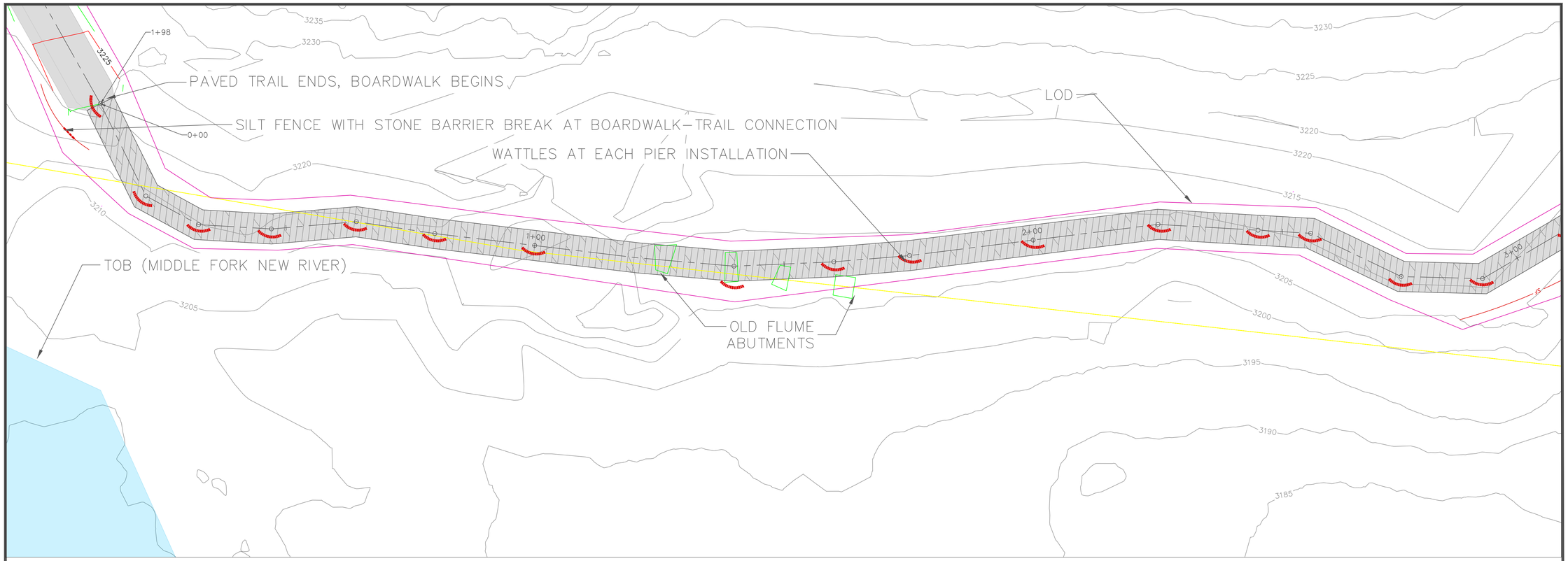

SEQUENCE OF CONSTRUCTION – SECTION 2A TRAIL & BOARDWALK

1. NO MAJOR GRADING ACTIVITIES ARE TO TAKE PLACE DURING WET WEATHER OR PERIODS OF PREDICTED WET WEATHER.
2. USE BRIDGE 1 (NOTE CAPACITY ON STRUCTURAL PLANS) TO ACCESS SECTION 2A TRAIL CONSTRUCTION. THE EXISTING ABUTMENTS FROM THE HISTORICAL FLUME (REMOVED IN SECTION 1B) CAN BE USED TO SUPPORT A TEMPORARY ELEVATED CROSSING (METAL/TIMBER) ABOVE THE WATER SURFACE FOR ADDITIONAL ACCESS AT THE CONTRACTORS' DISCRETION.
3. INSTALL SILT FENCE WITH STONE BARRIER BREAKS FOR SECTION 2A TRAIL STATION 0+00 – 1+97.98. ROUGH GRADE TRAIL, INSTALL GRADE DIP WITH CORRESPONDING STONE APRON AND CURLEX. STABILIZE ALL CUT AND FILL SLOPES WITH SEEDING/MATTING WITHIN SPECIFIED TIMELINES.
4. INSTALL BASE LAYER STONE ALONG SECTION 2A TRAIL. USE BRIDGE 1 AND SECTION 2A TRAIL FOR INSTALLATION OF SECTION 2B BOARDWALK.
5. INSTALL SILT FENCE WITH STONE BARRIERS WHERE SPECIFIEID AND WATTLE BARRIERS AT EACH BOARDWALK PIER SET AS CONSTRUCTION PROCEEDS. STABILIZE ANY DISTURBED AREAS WITH MATTING AND TEMPORARY SEED AT THE END OF EACH WORKING DAY.
6. REMOVE FOUR (4) EXISTING CONCRETE PILLARS AT SECTON 2A –BOARDWALK STATION 1+50.
7. REMOVE CURLEX FABRIC AND ACCUMULATED SEDIMENT FROM THE ONE (1) GRADE DIP AND DISPOSE OF OFF–SITE.
8. ALL EROSION CONTROL MEASURES TO BE MAINTAINED DURING THE CONSTRUCTION PERIOD. MAKE NECESSARY REPAIRS AS REQUIRED AND/OR AS DIRECTED BY THE ENGINEER.

LEGEND

- 1' CONTOUR (EXISTING)
- 5' CONTOUR (EXISTING)
- 1' CONTOUR (PROPOSED)
- 5' CONTOUR (PROPOSED)
- FEMA FLOODWAY
- PARCEL BOUNDARY
- TRAIL CENTERLINE ALIGNMENT
- AQUATIC FEATURES (EXTENT = TOP OF BANK)
- PAVED TRAIL
- BOARDWALK
- PROPOSED PIPE
- DIVERSION DITCH
- SLOPE MATTING
- SILT FENCE
- STONE BARRIER BREAK
- STONE APRON
- LIMITS OF DISTURBANCE
- HARDWARE CLOTH AND GRAVEL INLET PROTECTION
- GRADE DIP
- CONSTRUCTION ACCESS
- BOULDER RETAINING WALL

PREPARED BY:
IEC
INTERFACE ENVIRONMENTAL CONSULTING, LLC
476 HIDDEN POND ROAD
BOONE, NC 28607
919-656-4543

REVISIONS	DATE

PREPARED FOR: BLUE RIDGE CONSERVANCY

BOONE GORGE PARK ESC
TRAIL SECTION 2A
MIDDLE FORK GREENWAY
WATAUGA COUNTY, NC

SCALE: 1"=10'

SHEET X2.1

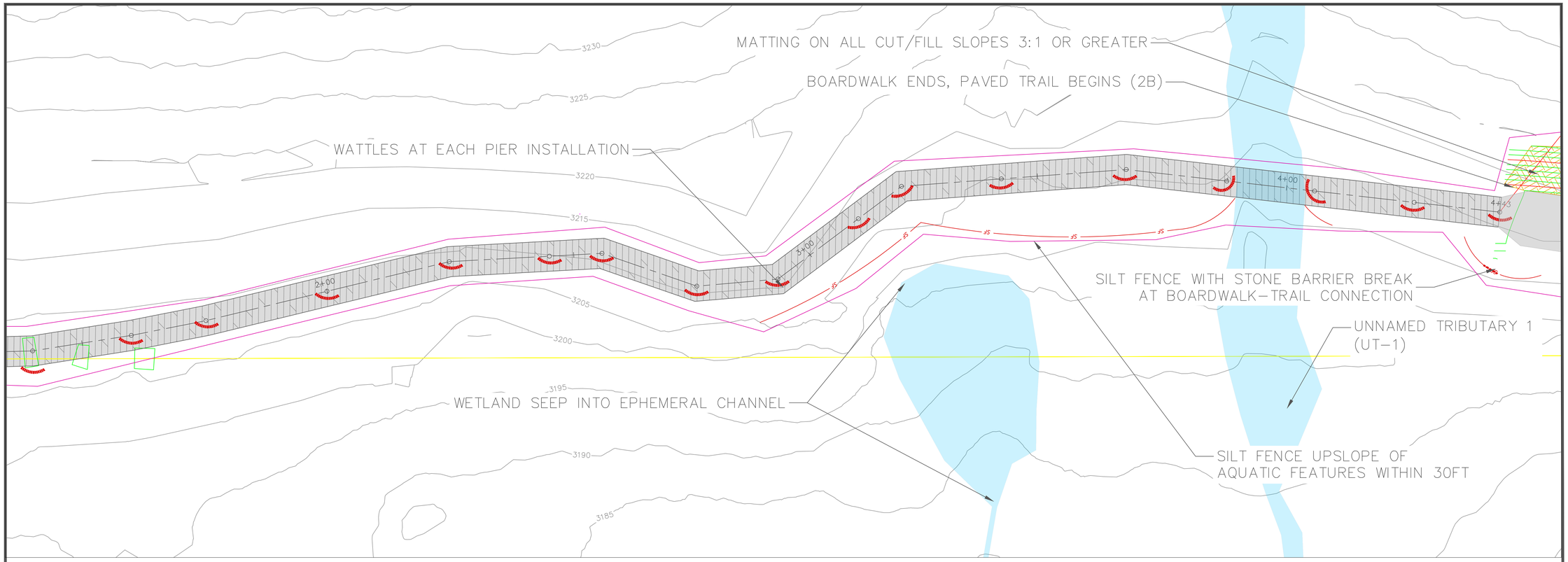

SEQUENCE OF CONSTRUCTION – SECTION 2A TRAIL & BOARDWALK

1. NO MAJOR GRADING ACTIVITIES ARE TO TAKE PLACE DURING WET WEATHER OR PERIODS OF PREDICTED WET WEATHER.
2. USE BRIDGE 1 (NOTE CAPACITY ON STRUCTURAL PLANS) TO ACCESS SECTION 2A TRAIL CONSTRUCTION. THE EXISTING ABUTMENTS FROM THE HISTORICAL FLUME (REMOVED IN SECTION 1B) CAN BE USED TO SUPPORT A TEMPORARY ELEVATED CROSSING (METAL/TIMBER) ABOVE THE WATER SURFACE FOR ADDITIONAL ACCESS AT THE CONTRACTORS' DISCRETION.
3. INSTALL SILT FENCE WITH STONE BARRIER BREAKS FOR SECTION 2A TRAIL STATION 0+00 – 1+97.98. ROUGH GRADE TRAIL, INSTALL GRADE DIP WITH CORRESPONDING STONE APRON AND CURLEX. STABILIZE ALL CUT AND FILL SLOPES WITH SEEDING/MATTING WITHIN SPECIFIED TIMELINES.
4. INSTALL BASE LAYER STONE ALONG SECTION 2A TRAIL. USE BRIDGE 1 AND SECTION 2A TRAIL FOR INSTALLATION OF SECTION 2B BOARDWALK.
5. INSTALL SILT FENCE WITH STONE BARRIERS WHERE SPECIFIEID AND WATTLE BARRIERS AT EACH BOARDWALK PIER SET AS CONSTRUCTION PROCEEDS. STABILIZE ANY DISTURBED AREAS WITH MATTING AND TEMPORARY SEED AT THE END OF EACH WORKING DAY.
6. REMOVE FOUR (4) EXISTING CONCRETE PILLARS AT SECTON 2A –BOARDWALK STATION 1+50.
7. REMOVE CURLEX FABRIC AND ACCUMULATED SEDIMENT FROM THE ONE (1) GRADE DIP AND DISPOSE OF OFF–SITE.
8. ALL EROSION CONTROL MEASURES TO BE MAINTAINED DURING THE CONSTRUCTION PERIOD. MAKE NECESSARY REPAIRS AS REQUIRED AND/OR AS DIRECTED BY THE ENGINEER.

LEGEND

- 1' CONTOUR (EXISTING)
- 5' CONTOUR (EXISTING)
- 1' CONTOUR (PROPOSED)
- 5' CONTOUR (PROPOSED)
- FEMA FLOODWAY
- PARCEL BOUNDARY
- TRAIL CENTERLINE ALIGNMENT
- AQUATIC FEATURES (EXTENT = TOP OF BANK)
- PAVED TRAIL
- BOARDWALK
- PROPOSED PIPE
- DIVERSION DITCH
- SLOPE MATTING
- SILT FENCE
- STONE BARRIER BREAK
- STONE APRON
- LIMITS OF DISTURBANCE
- HARDWARE CLOTH AND GRAVEL INLET PROTECTION
- GRADE DIP
- CONSTRUCTION ACCESS
- BOULDER RETAINING WALL

PREPARED BY:
IEC
INTERFACE ENVIRONMENTAL CONSULTING, LLC
476 HIDDEN POND ROAD
BOONE, NC 28607
919-656-4543

REVISIONS	DATE

PREPARED FOR: BLUE RIDGE CONSERVANCY

BOONE GORGE PARK ESC
TRAIL SECTION 2A
MIDDLE FORK GREENWAY
WATAUGA COUNTY, NC

SCALE: 1"=10'

SHEET X2.2

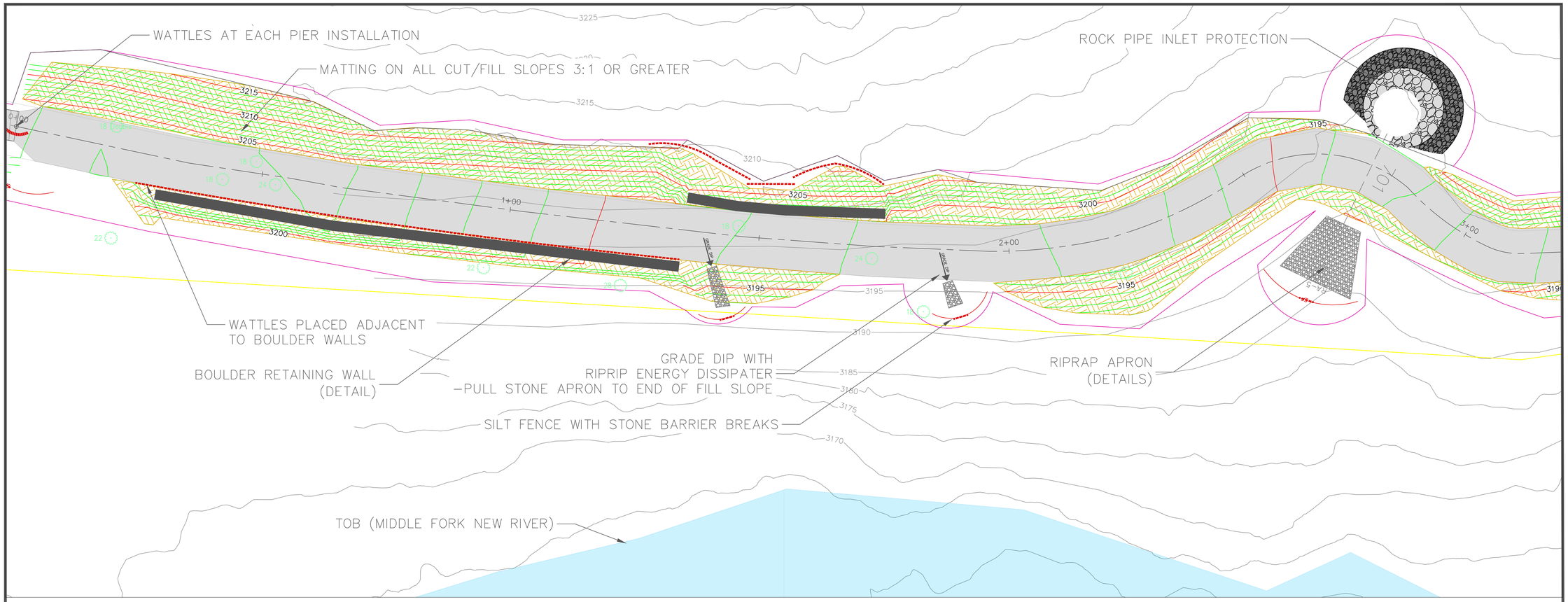

SEQUENCE OF CONSTRUCTION – SECTION 2B TRAIL & BOARDWALK

1. NO MAJOR GRADING ACTIVITIES ARE TO TAKE PLACE DURING WET WEATHER OR PERIODS OF PREDICTED WET WEATHER.
2. ESTABLISH CONSTRUCTION ENTRANCE AND ACCESS ROAD AT EXISTING EDGE OF PAVEMENT ALONG OLD BLOWING ROCK ROAD USING THE EXISTING DIRT ROAD AS THE FOOTPRINT FOR IMPROVING TO THE ACCESS ROAD STANDARD.
3. INSTALL TEMPORARY BRIDGE AND REMAINING CONSTRUCTION ACCESS ROAD ON RIVER LEFT PER ESC DETAILS. MINOR SLOPING FOR INSTALLATION IS APPROVED AND 404/401 PERMITTED. STABILIZE ANY DISTURBED AREAS AT THE END OF THE WORKING DAY.
4. INSTALL SILT FENCE W/ STONE BARRIER BREAKS AS SPECIFIED ALONG THE SECTION 2B TRAIL. BEGIN ROUGH GRADING AT SECTION 2B – STATION 0+00. WATTLES MUST BE PLACED UPSLOPE OF BOULDER WALLS DURING CONSTRUCTION OF BOULDER RETAINING WALLS. STABILIZE CUT AND FILL SLOPES WITH MATTING EVERY 200 LINEAR FEET OF TRAIL.
5 INSTALL PIPE 701 AND 703 WITH CORRESPONDING ROCK PIPE INLET PROTECTION AND RIPRAP APRON AS GRADING PROCEEDS ALONG THE CORRIDOR. PAVE SECTION 2B TRAIL.
6. INSTALL CONCRETE ABUTMENTS FOR BRIDGE 2 WITH ADJACENT WATTLE BARRIER PROTECTION IN PLACE PRIOR TO FORM AND POUR. INSTALL BRIDGE 2 VIA CRANE.
7. REMOVE CURLEX FABRIC AND ACCUMULATED SEDIMENT FROM GRADE DIPS AND DISPOSE OF OFF-SITE.
8. MAINTAIN TEMPORARY BRIDGE UNTIL SECTION 2B TRAIL HAS BEEN INSPECTED BY ENGINEER AND PROJECT MANAGER.
9. ALL EROSION CONTROL MEASURES TO BE MAINTAINED DURING THE CONSTRUCTION PERIOD. MAKE NECESSARY REPAIRS AS REQUIRED AND/OR AS DIRECTED BY THE ENGINEER.

LEGEND

- 1' CONTOUR (EXISTING)
- 5' CONTOUR (EXISTING)
- 1' CONTOUR (PROPOSED)
- 5' CONTOUR (PROPOSED)
- FEMA FLOODWAY
- PARCEL BOUNDARY
- TRAIL CENTERLINE ALIGNMENT
- AQUATIC FEATURES (EXTENT = TOP OF BANK)
- PAVED TRAIL
- BOARDWALK
- PROPOSED PIPE
- DIVERSION DITCH
- SLOPE MATTING
- SILT FENCE
- STONE BARRIER BREAK
- STONE APRON
- LIMITS OF DISTURBANCE
- HARDWARE CLOTH AND GRAVEL INLET PROTECTION
- GRADE DIP
- CONSTRUCTION ACCESS
- BOULDER RETAINING WALL

PREPARED BY:
IEC
INTERFACE ENVIRONMENTAL CONSULTING, LLC
476 HIDDEN POND ROAD
BOONE, NC 28607
919-656-4543

REVISIONS	DATE

PREPARED FOR: BLUE RIDGE CONSERVANCY

BOONE GORGE PARK ESC
TRAIL SECTION 2B
MIDDLE FORK GREENWAY
WATAUGA COUNTY, NC

SCALE: 1"=10'

SHEET X2.3

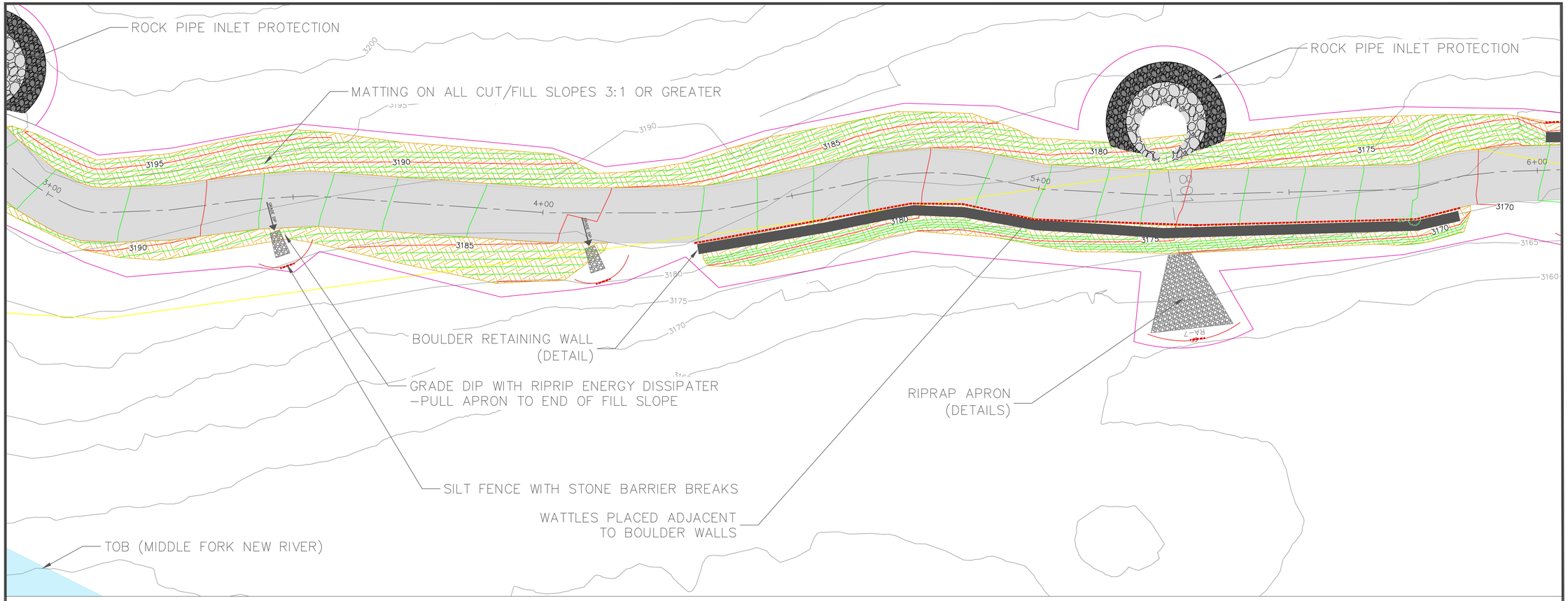

SEQUENCE OF CONSTRUCTION – SECTION 2B TRAIL & BOARDWALK

1. NO MAJOR GRADING ACTIVITIES ARE TO TAKE PLACE DURING WET WEATHER OR PERIODS OF PREDICTED WET WEATHER.
2. ESTABLISH CONSTRUCTION ENTRANCE AND ACCESS ROAD AT EXISTING EDGE OF PAVEMENT ALONG OLD BLOWING ROCK ROAD USING THE EXISTING DIRT ROAD AS THE FOOTPRINT FOR IMPROVING TO THE ACCESS ROAD STANDARD.
3. INSTALL TEMPORARY BRIDGE AND REMAINING CONSTRUCTION ACCESS ROAD ON RIVER LEFT PER ESC DETAILS. MINOR SLOPING FOR INSTALLATION IS APPROVED AND 404/401 PERMITTED. STABILIZE ANY DISTURBED AREAS AT THE END OF THE WORKING DAY.
4. INSTALL SILT FENCE W/ STONE BARRIER BREAKS AS SPECIFIED ALONG THE SECTION 2B TRAIL. BEGIN ROUGH GRADING AT SECTION 2B – STATION 0+00. WATTLES MUST BE PLACED UPSLOPE OF BOULDER WALLS DURING CONSTRUCTION OF BOULDER RETAINING WALLS. STABILIZE CUT AND FILL SLOPES WITH MATTING EVERY 200 LINEAR FEET OF TRAIL.
5. INSTALL PIPE 701 AND 703 WITH CORRESPONDING ROCK PIPE INLET PROTECTION AND RIPRAP APRON AS GRADING PROCEEDS ALONG THE CORRIDOR. PAVE SECTION 2B TRAIL.
6. INSTALL CONCRETE ABUTMENTS FOR BRIDGE 2 WITH ADJACENT WATTLE BARRIER PROTECTION IN PLACE PRIOR TO FORM AND POUR. INSTALL BRIDGE 2 VIA CRANE.
7. REMOVE CURLEX FABRIC AND ACCUMULATED SEDIMENT FROM GRADE DIPS AND DISPOSE OF OFF–SITE.
8. MAINTAIN TEMPORARY BRIDGE UNTIL SECTION 2B TRAIL HAS BEEN INSPECTED BY ENGINEER AND PROJECT MANAGER.
9. ALL EROSION CONTROL MEASURES TO BE MAINTAINED DURING THE CONSTRUCTION PERIOD. MAKE NECESSARY REPAIRS AS REQUIRED AND/OR AS DIRECTED BY THE ENGINEER.

LEGEND

- 1' CONTOUR (EXISTING)
- 5' CONTOUR (EXISTING)
- 1' CONTOUR (PROPOSED)
- 5' CONTOUR (PROPOSED)
- FEMA FLOODWAY
- PARCEL BOUNDARY
- TRAIL CENTERLINE ALIGNMENT
- AQUATIC FEATURES (EXTENT = TOP OF BANK)
- PAVED TRAIL
- BOARDWALK
- PROPOSED PIPE
- DIVERSION DITCH
- SLOPE MATTING
- SILT FENCE
- STONE BARRIER BREAK
- STONE APRON
- LIMITS OF DISTURBANCE
- HARDWARE CLOTH AND GRAVEL INLET PROTECTION
- GRADE DIP
- CONSTRUCTION ACCESS
- BOULDER RETAINING WALL

PREPARED BY:
IEC
INTERFACE ENVIRONMENTAL CONSULTING, LLC
476 HIDDEN POND ROAD
BOONE, NC 28607
919-656-4543

REVISIONS | DATE

PREPARED FOR: BLUE RIDGE CONSERVANCY

BOONE GORGE PARK ESC
TRAIL SECTION 2B
MIDDLE FORK GREENWAY
WATAUGA COUNTY, NC

SCALE: 1"=10'

SHEET X2.4

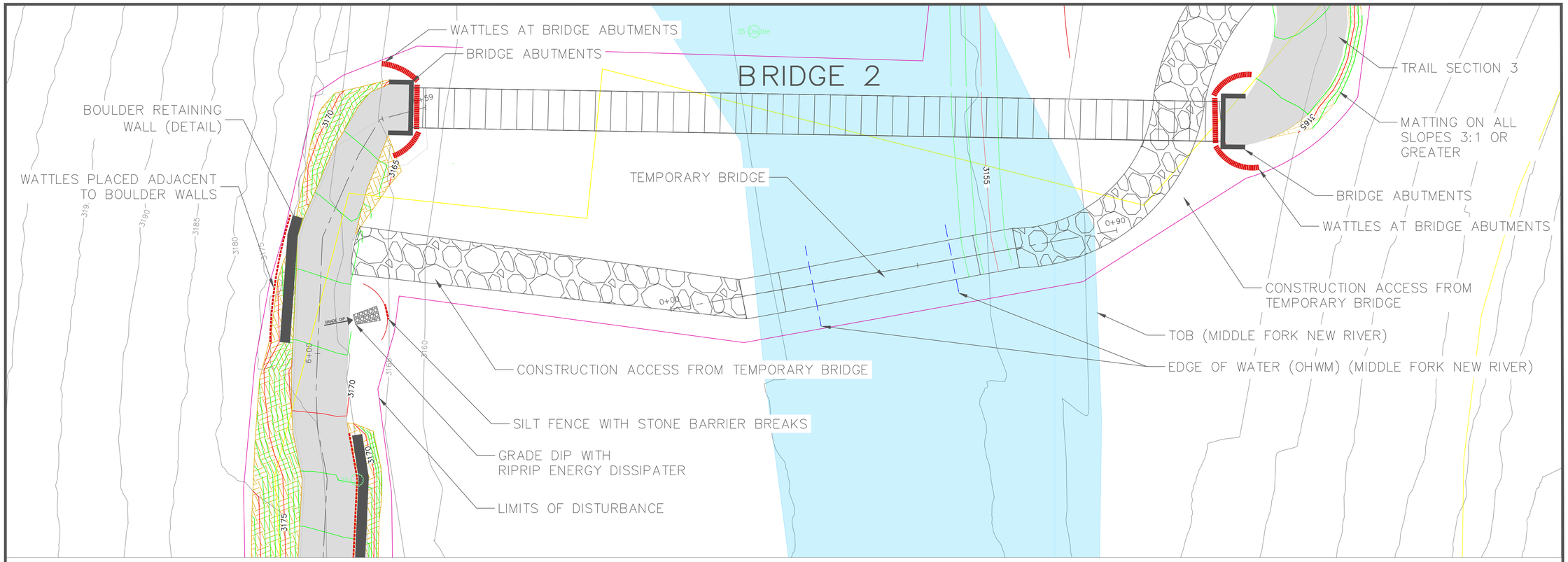

SEQUENCE OF CONSTRUCTION – SECTION 2B TRAIL & BOARDWALK

1. NO MAJOR GRADING ACTIVITIES ARE TO TAKE PLACE DURING WET WEATHER OR PERIODS OF PREDICTED WET WEATHER.
2. ESTABLISH CONSTRUCTION ENTRANCE AND ACCESS ROAD AT EXISTING EDGE OF PAVEMENT ALONG OLD BLOWING ROCK ROAD USING THE EXISTING DIRT ROAD AS THE FOOTPRINT FOR IMPROVING TO THE ACCESS ROAD STANDARD.
3. INSTALL TEMPORARY BRIDGE AND REMAINING CONSTRUCTION ACCESS ROAD ON RIVER LEFT PER ESC DETAILS. MINOR SLOPING FOR INSTALLATION IS APPROVED AND 404/401 PERMITTED. STABILIZE ANY DISTURBED AREAS AT THE END OF THE WORKING DAY.
4. INSTALL SILT FENCE W/ STONE BARRIER BREAKS AS SPECIFIED ALONG THE SECTION 2B TRAIL. BEGIN ROUGH GRADING AT SECTION 2B – STATION 0+00. WATTLES MUST BE PLACED UPSLOPE OF BOULDER WALLS DURING CONSTRUCTION OF BOULDER RETAINING WALLS. STABILIZE CUT AND FILL SLOPES WITH MATTING EVERY 200 LINEAR FEET OF TRAIL.
5 INSTALL PIPE 701 AND 703 WITH CORRESPONDING ROCK PIPE INLET PROTECTION AND RIPRAP APRON AS GRADING PROCEEDS ALONG THE CORRIDOR. PAVE SECTION 2B TRAIL.
6. INSTALL CONCRETE ABUTMENTS FOR BRIDGE 2 WITH ADJACENT WATTLE BARRIER PROTECTION IN PLACE PRIOR TO FORM AND POUR. INSTALL BRIDGE 2 VIA CRANE.
7. REMOVE CURLEX FABRIC AND ACCUMULATED SEDIMENT FROM GRADE DIPS AND DISPOSE OF OFF-SITE.
8. MAINTAIN TEMPORARY BRIDGE UNTIL SECTION 2B TRAIL HAS BEEN INSPECTED BY ENGINEER AND PROJECT MANAGER.
9. ALL EROSION CONTROL MEASURES TO BE MAINTAINED DURING THE CONSTRUCTION PERIOD. MAKE NECESSARY REPAIRS AS REQUIRED AND/OR AS DIRECTED BY THE ENGINEER.

LEGEND

- 1' CONTOUR (EXISTING)
- 5' CONTOUR (EXISTING)
- 1' CONTOUR (PROPOSED)
- 5' CONTOUR (PROPOSED)
- FEMA FLOODWAY
- PARCEL BOUNDARY
- TRAIL CENTERLINE ALIGNMENT
- AQUATIC FEATURES (EXTENT = TOP OF BANK)
- PAVED TRAIL
- BOARDWALK
- PROPOSED PIPE
- DIVERSION DITCH
- SLOPE MATTING
- SILT FENCE
- STONE BARRIER BREAK
- STONE APRON
- LIMITS OF DISTURBANCE
- HARDWARE CLOTH AND GRAVEL INLET PROTECTION
- GRADE DIP
- CONSTRUCTION ACCESS
- BOULDER RETAINING WALL

IEC
PREPARED BY:
INTERFACE ENVIRONMENTAL CONSULTING, LLC
476 HIDDEN POND ROAD
BOONE, NC 28607
919-656-4543

REVISIONS	DATE

PREPARED FOR: BLUE RIDGE CONSERVANCY

BOONE GORGE PARK ESC
TRAIL SECTION 2B
MIDDLE FORK GREENWAY
WATAUGA COUNTY, NC

SCALE: 1"=10'

SHEET X2.5

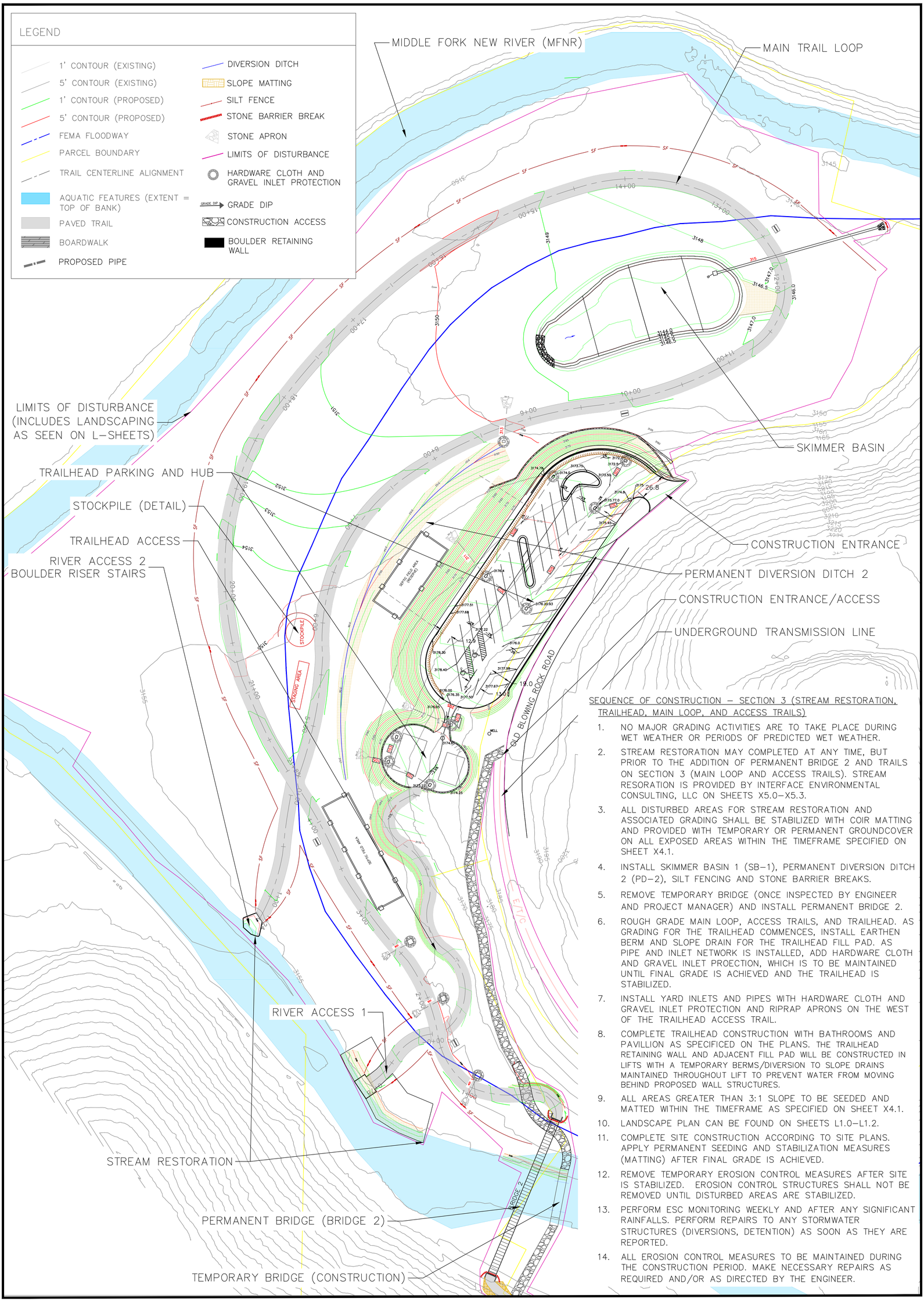

SEQUENCE OF CONSTRUCTION – SECTION 3 (STREAM RESTORATION, TRAILHEAD, MAIN LOOP, AND ACCESS TRAILS)

1. NO MAJOR GRADING ACTIVITIES ARE TO TAKE PLACE DURING WET WEATHER OR PERIODS OF PREDICTED WET WEATHER.
2. STREAM RESTORATION MAY COMPLETED AT ANY TIME, BUT PRIOR TO THE ADDITION OF PERMANENT BRIDGE 2 AND TRAILS ON SECTION 3 (MAIN LOOP AND ACCESS TRAILS). STREAM RESORATION IS PROVIDED BY INTERFACE ENVIRONMENTAL CONSULTING, LLC ON SHEETS X5.0–X5.3.
3. ALL DISTURBED AREAS FOR STREAM RESTORATION AND ASSOCIATED GRADING SHALL BE STABILIZED WITH COIR MATTING AND PROVIDED WITH TEMPORARY OR PERMANENT GROUNDCOVER ON ALL EXPOSED AREAS WITHIN THE TIMEFRAME SPECIFIED ON SHEET X4.1.
4. INSTALL SKIMMER BASIN 1 (SB–1), PERMANENT DIVERSION DITCH 2 (PD–2), SILT FENCING AND STONE BARRIER BREAKS.
5. REMOVE TEMPORARY BRIDGE (ONCE INSPECTED BY ENGINEER AND PROJECT MANAGER) AND INSTALL PERMANENT BRIDGE 2.
6. ROUGH GRADE MAIN LOOP, ACCESS TRAILS, AND TRAILHEAD. AS GRADING FOR THE TRAILHEAD COMMENCES, INSTALL EARTHEN BERM AND SLOPE DRAIN FOR THE TRAILHEAD FILL PAD. AS PIPE AND INLET NETWORK IS INSTALLED, ADD HARDWARE CLOTH AND GRAVEL INLET PROECTION, WHICH IS TO BE MAINTAINED UNTIL FINAL GRADE IS ACHIEVED AND THE TRAILHEAD IS STABILIZED.
7. INSTALL YARD INLETS AND PIPES WITH HARDWARE CLOTH AND GRAVEL INLET PROTECTION AND RIPRAP APRONS ON THE WEST OF THE TRAILHEAD ACCESS TRAIL.
8. COMPLETE TRAILHEAD CONSTRUCTION WITH BATHROOMS AND PAVILLION AS SPECIFICED ON THE PLANS. THE TRAILHEAD RETAINING WALL AND ADJACENT FILL PAD WILL BE CONSTRUCTED IN LIFTS WITH A TEMPORARY BERMS/DIVERSION TO SLOPE DRAINS MAINTAINED THROUGHOUT LIFT TO PREVENT WATER FROM MOVING BEHIND PROPOSED WALL STRUCTURES.
9. ALL AREAS GREATER THAN 3:1 SLOPE TO BE SEEDED AND MATTED WITHIN THE TIMEFRAME AS SPECIFIED ON SHEET X4.1.
10. LANDSCAPE PLAN CAN BE FOUND ON SHEETS L1.0–L1.2.
11. COMPLETE SITE CONSTRUCTION ACCORDING TO SITE PLANS. APPLY PERMANENT SEEDING AND STABILIZATION MEASURES (MATTING) AFTER FINAL GRADE IS ACHIEVED.
12. REMOVE TEMPORARY EROSION CONTROL MEASURES AFTER SITE IS STABILIZED. EROSION CONTROL STRUCTURES SHALL NOT BE REMOVED UNTIL DISTURBED AREAS ARE STABILIZED.
13. PERFORM ESC MONITORING WEEKLY AND AFTER ANY SIGNIFICANT RAINFALLS. PERFORM REPAIRS TO ANY STORMWATER STRUCTURES (DIVERSIONS, DETENTION) AS SOON AS THEY ARE REPORTED.
14. ALL EROSION CONTROL MEASURES TO BE MAINTAINED DURING THE CONSTRUCTION PERIOD. MAKE NECESSARY REPAIRS AS REQUIRED AND/OR AS DIRECTED BY THE ENGINEER.

SHEET X3.0

N W E S

SCALE: 1"=40'
0 50 100 Feet

PREPARED FOR: BLUE RIDGE CONSERVANCY

BOONE GORGE PARK
TRAIL SECTION 3 – OVERALL
MIDDLE FORK GREENWAY

WATAUGA COUNTY, NC

REVISIONS	DATE

PREPARED BY:

INTERFACE ENVIRONMENTAL CONSULTING, LLC

476 HIDDEN POND ROAD
BOONE, NC 28607
919–656–4543

IEC

SEQUENCE OF CONSTRUCTION – SECTION 3 (STREAM RESTORATION, TRAILHEAD, MAIN LOOP, AND ACCESS TRAILS)

1. NO MAJOR GRADING ACTIVITIES ARE TO TAKE PLACE DURING WET WEATHER OR PERIODS OF PREDICTED WET WEATHER.
2. STREAM RESTORATION MAY COMPLETED AT ANY TIME, BUT PRIOR TO THE ADDITION OF PERMANENT BRIDGE 2 AND TRAILS ON SECTION 3 (MAIN LOOP AND ACCESS TRAILS). STREAM RESORATION IS PROVIDED BY INTERFACE ENVIRONMENTAL CONSULTING, LLC ON SHEETS X5.0–X5.3.
3. ALL DISTURBED AREAS FOR STREAM RESTORATION AND ASSOCIATED GRADING SHALL BE STABILIZED WITH COIR MATTING AND PROVIDED WITH TEMPORARY OR PERMANENT GROUNDCOVER ON ALL EXPOSED AREAS WITHIN THE TIMEFRAME SPECIFIED ON SHEET X4.1.
4. INSTALL SKIMMER BASIN 1 (SB–1), PERMANENT DIVERSION DITCH 2 (PD–2), SILT FENCING AND STONE BARRIER BREAKS.
5. REMOVE TEMPORARY BRIDGE (ONCE INSPECTED BY ENGINEER AND PROJECT MANAGER) AND INSTALL PERMANENT BRIDGE 2.
6. ROUGH GRADE MAIN LOOP, ACCESS TRAILS, AND TRAILHEAD. AS GRADING FOR THE TRAILHEAD COMMENCES, INSTALL EARTHEN BERM AND SLOPE DRAIN FOR THE TRAILHEAD FILL PAD. AS PIPE AND INLET NETWORK IS INSTALLED, ADD HARDWARE CLOTH AND GRAVEL INLET PROECTION, WHICH IS TO BE MAINTAINED UNTIL FINAL GRADE IS ACHIEVED AND THE TRAILHEAD IS STABILIZED.
7. INSTALL YARD INLETS AND PIPES WITH HARDWARE CLOTH AND GRAVEL INLET PROTECTION AND RIPRAP APRONS ON THE WEST OF THE TRAILHEAD ACCESS TRAIL.
8. COMPLETE TRAILHEAD CONSTRUCTION WITH BATHROOMS AND PAVILLION AS SPECIFICED ON THE PLANS. THE TRAILHEAD RETAINING WALL AND ADJACENT FILL PAD WILL BE CONSTRUCTED IN LIFTS WITH A TEMPORARY BERMS/DIVERSION TO SLOPE DRAINS MAINTAINED THROUGHOUT LIFT TO PREVENT WATER FROM MOVING BEHIND PROPOSED WALL STRUCTURES.
9. ALL AREAS GREATER THAN 3:1 SLOPE TO BE SEEDED AND MATTED WITHIN THE TIMEFRAME AS SPECIFIED ON SHEET X4.1.
10. LANDSCAPE PLAN CAN BE FOUND ON SHEETS L1.0–L1.2.
11. COMPLETE SITE CONSTRUCTION ACCORDING TO SITE PLANS. APPLY PERMANENT SEEDING AND STABILIZATION MEASURES (MATTING) AFTER FINAL GRADE IS ACHIEVED.
12. REMOVE TEMPORARY EROSION CONTROL MEASURES AFTER SITE IS STABILIZED. EROSION CONTROL STRUCTURES SHALL NOT BE REMOVED UNTIL DISTURBED AREAS ARE STABILIZED.
13. PERFORM ESC MONITORING WEEKLY AND AFTER ANY SIGNIFICANT RAINFALLS. PERFORM REPAIRS TO ANY STORMWATER STRUCTURES (DIVERSIONS, DETENTION) AS SOON AS THEY ARE REPORTED.
14. ALL EROSION CONTROL MEASURES TO BE MAINTAINED DURING THE CONSTRUCTION PERIOD. MAKE NECESSARY REPAIRS AS REQUIRED AND/OR AS DIRECTED BY THE ENGINEER.

PREPARED BY:
IEC
INTERFACE ENVIRONMENTAL CONSULTING, LLC
476 HIDDEN POND ROAD
BOONE, NC 28607
919-656-4543

REVISIONS	DATE

PREPARED FOR: BLUE RIDGE CONSERVANCY

BOONE GORGE PARK
TRAIL SECTION 3 – TRAILHEAD
MIDDLE FORK GREENWAY
WATAUGA COUNTY, NC

SCALE: 1" = 30'

SHEET X3.1

SEQUENCE OF CONSTRUCTION – SECTION 3 (STREAM RESTORATION, TRAILHEAD, MAIN LOOP, AND ACCESS TRAILS)

1. NO MAJOR GRADING ACTIVITIES ARE TO TAKE PLACE DURING WET WEATHER OR PERIODS OF PREDICTED WET WEATHER.
2. STREAM RESTORATION MAY COMPLETED AT ANY TIME, BUT PRIOR TO THE ADDITION OF PERMANENT BRIDGE 2 AND TRAILS ON SECTION 3 (MAIN LOOP AND ACCESS TRAILS). STREAM RESORATION IS PROVIDED BY INTERFACE ENVIRONMENTAL CONSULTING, LLC ON SHEETS X5.0–X5.3.
3. ALL DISTURBED AREAS FOR STREAM RESTORATION AND ASSOCIATED GRADING SHALL BE STABILIZED WITH COIR MATTING AND PROVIDED WITH TEMPORARY OR PERMANENT GROUNDCOVER ON ALL EXPOSED AREAS WITHIN THE TIMEFRAME SPECIFIED ON SHEET X4.1.
4. INSTALL SKIMMER BASIN 1 (SB–1), PERMANENT DIVERSION DITCH 2 (PD–2), SILT FENCING AND STONE BARRIER BREAKS.
5. REMOVE TEMPORARY BRIDGE (ONCE INSPECTED BY ENGINEER AND PROJECT MANAGER) AND INSTALL PERMANENT BRIDGE 2.
6. ROUGH GRADE MAIN LOOP, ACCESS TRAILS, AND TRAILHEAD. AS GRADING FOR THE TRAILHEAD COMMENCES, INSTALL EARTHEN BERM AND SLOPE DRAIN FOR THE TRAILHEAD FILL PAD. AS PIPE AND INLET NETWORK IS INSTALLED, ADD HARDWARE CLOTH AND GRAVEL INLET PROECTION, WHICH IS TO BE MAINTAINED UNTIL FINAL GRADE IS ACHIEVED AND THE TRAILHEAD IS STABILIZED.
7. INSTALL YARD INLETS AND PIPES WITH HARDWARE CLOTH AND GRAVEL INLET PROTECTION AND RIPRAP APRONS ON THE WEST OF THE TRAILHEAD ACCESS TRAIL.
8. COMPLETE TRAILHEAD CONSTRUCTION WITH BATHROOMS AND PAVILLION AS SPECIFICED ON THE PLANS. THE TRAILHEAD RETAINING WALL AND ADJACENT FILL PAD WILL BE CONSTRUCTED IN LIFTS WITH A TEMPORARY BERMS/DIVERSION TO SLOPE DRAINS MAINTAINED THROUGHOUT LIFT TO PREVENT WATER FROM MOVING BEHIND PROPOSED WALL STRUCTURES.
9. ALL AREAS GREATER THAN 3:1 SLOPE TO BE SEEDED AND MATTED WITHIN THE TIMEFRAME AS SPECIFIED ON SHEET X4.1.
10. LANDSCAPE PLAN CAN BE FOUND ON SHEETS L1.0–L1.2.
11. COMPLETE SITE CONSTRUCTION ACCORDING TO SITE PLANS. APPLY PERMANENT SEEDING AND STABILIZATION MEASURES (MATTING) AFTER FINAL GRADE IS ACHIEVED.
12. REMOVE TEMPORARY EROSION CONTROL MEASURES AFTER SITE IS STABILIZED. EROSION CONTROL STRUCTURES SHALL NOT BE REMOVED UNTIL DISTURBED AREAS ARE STABILIZED.
13. PERFORM ESC MONITORING WEEKLY AND AFTER ANY SIGNIFICANT RAINFALLS. PERFORM REPAIRS TO ANY STORMWATER STRUCTURES (DIVERSIONS, DETENTION) AS SOON AS THEY ARE REPORTED.
14. ALL EROSION CONTROL MEASURES TO BE MAINTAINED DURING THE CONSTRUCTION PERIOD. MAKE NECESSARY REPAIRS AS REQUIRED AND/OR AS DIRECTED BY THE ENGINEER.

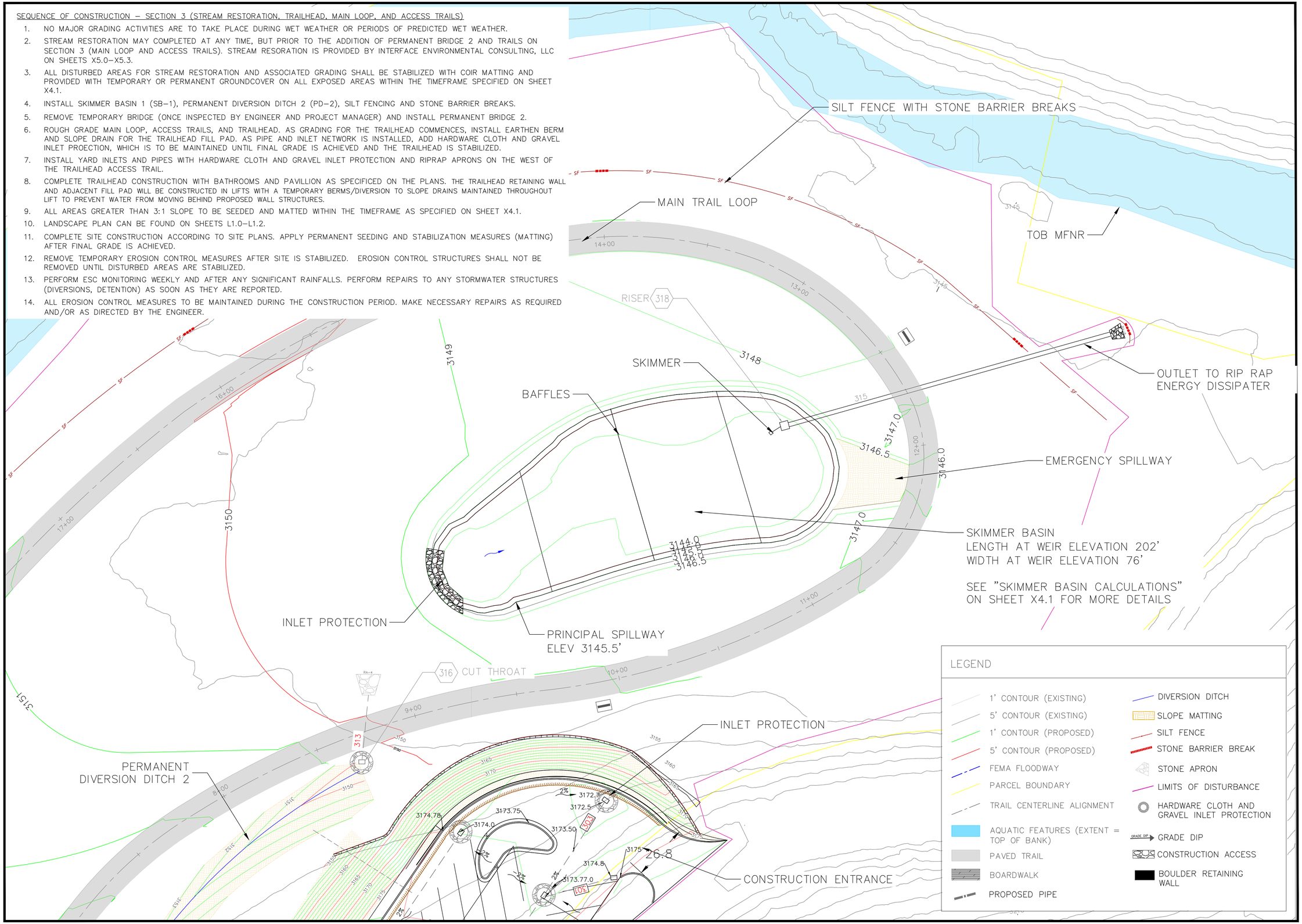

PREPARED BY:
INTERFACE ENVIRONMENTAL CONSULTING, LLC
476 HIDDEN POND ROAD
BOONE, NC 28607
919-656-4543

IEC

REVISIONS	DATE

PREPARED FOR: BLUE RIDGE CONSERVANCY

BOONE GORGE PARK
TRAIL SECTION 3 – SKIMMER BASIN
MIDDLE FORK GREENWAY
WATAUGA COUNTY, NC

SCALE: 1"=20'

SHEET X3.2

PART III
SELF-INSPECTION, RECORDKEEPING AND REPORTING

SECTION A: SELF-INSPECTION

Self-inspections are required during normal business hours in accordance with the table below. When adverse weather or site conditions would cause the safety of the inspection personnel to be in jeopardy, the inspection may be delayed until the next business day on which it is safe to perform the inspection. In addition, when a storm event of equal to or greater than 1.0 inch occurs outside of normal business hours, the self-inspection shall be performed upon the commencement of the next business day. Any time when inspections were delayed shall be noted in the Inspection Record.

Inspect	Frequency (during normal business hours)	Inspection records must include:
(1) Rain gauge maintained in good working order	Daily	Daily rainfall amounts. If no daily rain gauge observations are made during weekend or holiday periods, and no individual-day rainfall information is available, record the cumulative rain measurement for those un-attended days (anc this will determine if a site inspection is needed). Days on which no rainfall occurred shall be recorded as "zero." The permittee may use another rain-monitoring device approved by the Division.
(2) E&SC Measures	At least once per 7 calendar days and within 24 hours of a rain event ≥ 1.0 inch in 24 hours	1. Identification of the measures inspected, 2. Date and time of the inspection, 3. Name of the person performing the inspection, 4. Indication of whether the measures were operating properly, 5. Description of maintenance needs for the measure, 6. Description, evidence, and date of corrective actions taken.
(3) Stormwater discharge outfalls (SDOs)	At least once per 7 calendar days and within 24 hours of a rain event ≥ 1.0 inch in 24 hours	1. Identification of the discharge outfalls inspected, 2. Date and time of the inspection, 3. Name of the person performing the inspection, 4. Evidence of indicators of stormwater pollution such as oil sheen, floating or suspended solids or discoloration, 5. Indication of visible sediment leaving the site, 6. Description, evidence, and date of corrective actions taken.
(4) Perimeter of site	At least once per 7 calendar days and within 24 hours of a rain event ≥ 1.0 inch in 24 hours	If visible sedimentation is found outside site limits, then a record of the following shall be made: 1. Actions taken to clean up or stabilize the sediment that has left the site limits, 2. Description, evidence, and date of corrective actions taken, and 3. An explanation as to the actions taken to control future releases.
(5) Streams or wetlands onsite or offsite (where accessible)	At least once per 7 calendar days and within 24 hours of a rain event ≥ 1.0 inch in 24 hours	If the stream or wetland has increased visible sedimentation or a stream has visible increased turbidity from the construction activity, then a record of the following shall be made: 1. Description, evidence and date of corrective actions taken, and 2. Records of the required reports to the appropriate Division Regional Office per Part III, Section C, Item (2)(a) of this permit.
(6) Ground stabilization measures	After each phase of grading	1. The phase of grading (installation of perimeter E&SC measures, clearing and grubbing, installation of storm drainage facilities, completion of all land-disturbing activity, construction or redevelopment, permanent ground cover). 2. Documentation that the required ground stabilization measures have been provided within the required timeframe or an assurance that they will be provided as soon as possible.

NOTE: The rain inspection resets the required 7 calendar day inspection requirement.

PART III
SELF-INSPECTION, RECORDKEEPING AND REPORTING

SECTION B: RECORDKEEPING

1. E&SC Plan Documentation

The approved E&SC plan as well as any approved deviation shall be kept on the site. The approved E&SC plan must be kept up-to-date throughout the coverage under this permit. The following items pertaining to the E&SC plan shall be kept on site and available for inspection at all times during normal business hours.

Item to Document	Documentation Requirements
(a) Each E&SC measure has been installed and does not significantly deviate from the locations, dimensions and relative elevations shown on the approved E&SC plan.	Initial and date each E&SC measure on a copy of the approved E&SC plan or complete, date and sign an inspection report that lists each E&SC measure shown on the approved E&SC plan. This documentation is required upon the initial installation of the E&SC measures or if the E&SC measures are modified after initial installation.
(b) A phase of grading has been completed.	Initial and date a copy of the approved E&SC plan or complete, date and sign an inspection report to indicate completion of the construction phase.
(c) Ground cover is located and installed in accordance with the approved E&SC plan.	Initial and date a copy of the approved E&SC plan or complete, date and sign an inspection report to indicate compliance with approved ground cover specifications.
(d) The maintenance and repair requirements for all E&SC measures have been performed.	Complete, date and sign an inspection report.
(e) Corrective actions have been taken to E&SC measures.	Initial and date a copy of the approved E&SC plan or complete, date and sign an inspection report to indicate the completion of the corrective action.

2. Additional Documentation to be Kept on Site

In addition to the E&SC plan documents above, the following items shall be kept on the site and available for inspectors at all times during normal business hours, unless the Division provides a site-specific exemption based on unique site conditions that make this requirement not practical:

(a) This General Permit as well as the Certificate of Coverage, after it is received.

(b) Records of inspections made during the previous twelve months. The permittee shall record the required observations on the Inspection Record Form provided by the Division or a similar inspection form that includes all the required elements. Use of electronically-available records in lieu of the required paper copies will be allowed if shown to provide equal access and utility as the hard-copy records.

3. Documentation to be Retained for Three Years

All data used to complete the e-NOI and all inspection records shall be maintained for a period of three years after project completion and made available upon request. [40 CFR 122.41]

PART III
SELF-INSPECTION, RECORDKEEPING AND REPORTING

SECTION C: REPORTING

1. Occurrences that Must be Reported

Permittees shall report the following occurrences:

(a) Visible sediment deposition in a stream or wetland.

(b) Oil spills if:
- **They are 25 gallons or more,**
- **They are less than 25 gallons but cannot be cleaned up within 24 hours,**
- **They cause sheen on surface waters (regardless of volume), or**
- **They are within 100 feet of surface waters (regardless of volume).**

(c) Releases of hazardous substances in excess of reportable quantities under Section 311 of the Clean Water Act (Ref: 40 CFR 110.3 and 40 CFR 117.3) or Section 102 of CERCLA (Ref: 40 CFR 302.4) or G.S. 143-215.85.

(d) Anticipated bypasses and unanticipated bypasses.

(e) Noncompliance with the conditions of this permit that may endanger health or the environment.

2. Reporting Timeframes and Other Requirements

After a permittee becomes aware of an occurrence that must be reported, he shall contact the appropriate Division regional office within the timeframes and in accordance with the other requirements listed below. Occurrences outside normal business hours may also be reported to the Department's Environmental Emergency Center personnel at (800) 858-0368.

Occurrence	Reporting Timeframes [After Discovery] and Other Requirements
(a) Visible sediment deposition in a stream or wetland	• ***Within 24 hours,*** an oral or electronic notification. • ***Within 7 calendar days,*** a report that contains a description of the sediment and actions taken to address the cause of the deposition. Division staff may waive the requirement for a written report on a case-by-case basis. • If the stream is named on the NC 303(d) list as impaired for sediment-related causes, the permittee may be required to perform additional monitoring, inspections or apply more stringent practices if staff determine that additional requirements are needed to assure compliance with the federal or state impaired-waters conditions.
(b) Oil spills and release of hazardous substances per Item 1(b) (c) above	• ***Within 24 hours,*** an oral or electronic notification. The notification shall include information about the date, time, nature, volume and location of the spill or release.
(c) Anticipated bypasses [40 CFR 122.41(m)(3)]	• ***A report at least ten days before the date of the bypass, if possible.*** The report shall include an evaluation of the anticipated quality and effect of the bypass.
(d) Unanticipated bypasses [40 CFR 122.41(m)(3)]	• ***Within 24 hours,*** an oral or electronic notification. • ***Within 7 calendar days,*** a report that includes an evaluation of the quality and effect of the bypass.
(e) Noncompliance with the conditions of this permit that may endanger health or the environment[40 CFR 122.41(l)(7)]	• ***Within 24 hours,*** an oral or electronic notification. • ***Within 7 calendar days,*** a report that contains a description of the noncompliance, and its causes; the period of noncompliance, including exact dates and times, and if the noncompliance has not been corrected, the anticipated time noncompliance is expected to continue; and steps taken or planned to reduce, eliminate, and prevent reoccurrence of the noncompliance. [40 CFR 122.41(l)(6). • Division staff may waive the requirement for a written report on a case-by-case basis.

PART II, SECTION G, ITEM (4)
DRAW DOWN OF SEDIMENT BASINS FOR MAINTENANCE OR CLOSE OUT

Sediment basins and traps that receive runoff from drainage areas of one acre or more shall use outlet structures that withdraw water from the surface when these devices need to be drawn down for maintenance or close out unless this is infeasible. The circumstances in which it is not feasible to withdraw water from the surface shall be rare (for example, times with extended cold weather). Non-surface withdrawals from sediment basins shall be allowed only when all of the following criteria have been met:

(a) The E&SC plan authority has been provided with documentation of the non-surface withdrawal and the specific time periods or conditions in which it will occur. The non-surface withdrawal shall not commence until the E&SC plan authority has approved these items,
(b) The non-surface withdrawal has been reported as an anticipated bypass in accordance with Part III, Section C, Item (2)(c) and (d) of this permit,
(c) Dewatering discharges are treated with controls to minimize discharges of pollutants from stormwater that is removed from the sediment basin. Examples of appropriate controls include properly sited, designed and maintained dewatering tanks, weir tanks, and filtration systems,
(d) Vegetated, upland areas of the sites or a properly designed stone pad is used to the extent feasible at the outlet of the dewatering treatment devices described in Item (c) above,
(e) Velocity dissipation devices such as check dams, sediment traps, and riprap are provided at the discharge points of all dewatering devices, and
(f) Sediment removed from the dewatering treatment devices described in Item (c) above is disposed of in a manner that does not cause deposition of sediment into waters of the United States.

NORTH CAROLINA *Environmental Quality*

NCG01 SELF-INSPECTION, RECORDKEEPING AND REPORTING

EFFECTIVE: 04/01/19

GROUND STABILIZATION AND MATERIALS HANDLING PRACTICES FOR COMPLIANCE WITH THE NCG01 CONSTRUCTION GENERAL PERMIT

Implementing the details and specifications on this plan sheet will result in the construction activity being considered compliant with the Ground Stabilization and Materials Handling sections of the NCG01 Construction General Permit (Sections E and F, respectively). The permittee shall comply with the Erosion and Sediment Control plan approved by the delegated authority having jurisdiction. All details and specifications shown on this sheet may not apply depending on site conditions and the delegated authority having jurisdiction.

SECTION E: GROUND STABILIZATION

Required Ground Stabilization Timeframes			
	Site Area Description	**Stabilize within this many calendar days after ceasing land disturbance**	**Timeframe variations**
(a)	Perimeter dikes, swales, ditches, and perimeter slopes	7	None
(b)	High Quality Water (HQW) Zones	7	None
(c)	Slopes steeper than 3:1	7	If slopes are 10' or less in length and are not steeper than 2:1, 14 days are allowed
(d)	Slopes 3:1 to 4:1	14	-7 days for slopes greater than 50' in length and with slopes steeper than 4:1 -7 days for perimeter dikes, swales, ditches, perimeter slopes and HQW Zones -10 days for Falls Lake Watershed
(e)	Areas with slopes flatter than 4:1	14	-7 days for perimeter dikes, swales, ditches, perimeter slopes and HQW Zones -10 days for Falls Lake Watershed unless there is zero slope

Note: After the permanent cessation of construction activities, any areas with temporary ground stabilization shall be converted to permanent ground stabilization as soon as practicable but in no case longer than 90 calendar days after the last land disturbing activity. Temporary ground stabilization shall be maintained in a manner to render the surface stable against accelerated erosion until permanent ground stabilization is achieved.

GROUND STABILIZATION SPECIFICATION

Stabilize the ground sufficiently so that rain will not dislodge the soil. Use one of the techniques in the table below:

Temporary Stabilization	Permanent Stabilization
• Temporary grass seed covered with straw or other mulches and tackifiers • Hydroseeding • Rolled erosion control products with or without temporary grass seed • Appropriately applied straw or other mulch • Plastic sheeting	• Permanent grass seed covered with straw or other mulches and tackifiers • Geotextile fabrics such as permanent soil reinforcement matting • Hydroseeding • Shrubs or other permanent plantings covered with mulch • Uniform and evenly distributed ground cover sufficient to restrain erosion • Structural methods such as concrete, asphalt or retaining walls • Rolled erosion control products with grass seed

POLYACRYLAMIDES (PAMS) AND FLOCCULANTS

1. Select flocculants that are appropriate for the soils being exposed during construction, selecting from the *NC DWR List of Approved PAMS/Flocculants*.
2. Apply flocculants at or before the inlets to Erosion and Sediment Control Measures.
3. Apply flocculants at the concentrations specified in the *NC DWR List of Approved PAMS/Flocculants* and in accordance with the manufacturer's instructions.
4. Provide ponding area for containment of treated Stormwater before discharging offsite.
5. Store flocculants in leak-proof containers that are kept under storm-resistant cover or surrounded by secondary containment structures.

EQUIPMENT AND VEHICLE MAINTENANCE

1. Maintain vehicles and equipment to prevent discharge of fluids.
2. Provide drip pans under any stored equipment.
3. Identify leaks and repair as soon as feasible, or remove leaking equipment from the project.
4. Collect all spent fluids, store in separate containers and properly dispose as hazardous waste (recycle when possible).
5. Remove leaking vehicles and construction equipment from service until the problem has been corrected.
6. Bring used fuels, lubricants, coolants, hydraulic fluids and other petroleum products to a recycling or disposal center that handles these materials.

LITTER, BUILDING MATERIAL AND LAND CLEARING WASTE

1. Never bury or burn waste. Place litter and debris in approved waste containers.
2. Provide a sufficient number and size of waste containers (e.g dumpster, trash receptacle) on site to contain construction and domestic wastes.
3. Locate waste containers at least 50 feet away from storm drain inlets and surface waters unless no other alternatives are reasonably available.
4. Locate waste containers on areas that do not receive substantial amounts of runoff from upland areas and does not drain directly to a storm drain, stream or wetland.
5. Cover waste containers at the end of each workday and before storm events or provide secondary containment. Repair or replace damaged waste containers.
6. Anchor all lightweight items in waste containers during times of high winds.
7. Empty waste containers as needed to prevent overflow. Clean up immediately if containers overflow.
8. Dispose waste off-site at an approved disposal facility.
9. On business days, clean up and dispose of waste in designated waste containers.

PAINT AND OTHER LIQUID WASTE

1. Do not dump paint and other liquid waste into storm drains, streams or wetlands.
2. Locate paint washouts at least 50 feet away from storm drain inlets and surface waters unless no other alternatives are reasonably available.
3. Contain liquid wastes in a controlled area.
4. Containment must be labeled, sized and placed appropriately for the needs of site.
5. Prevent the discharge of soaps, solvents, detergents and other liquid wastes from construction sites.

PORTABLE TOILETS

1. Install portable toilets on level ground, at least 50 feet away from storm drains, streams or wetlands unless there is no alternative reasonably available. If 50 foot offset is not attainable, provide relocation of portable toilet behind silt fence or place on a gravel pad and surround with sand bags.
2. Provide staking or anchoring of portable toilets during periods of high winds or in high foot traffic areas.
3. Monitor portable toilets for leaking and properly dispose of any leaked material. Utilize a licensed sanitary waste hauler to remove leaking portable toilets and replace with properly operating unit.

EARTHEN STOCKPILE MANAGEMENT

1. Show stockpile locations on plans. Locate earthen-material stockpile areas at least 50 feet away from storm drain inlets, sediment basins, perimeter sediment controls and surface waters unless it can be shown no other alternatives are reasonably available.
2. Protect stockpile with silt fence installed along toe of slope with a minimum offset of five feet from the toe of stockpile.
3. Provide stable stone access point when feasible.
4. Stabilize stockpile within the timeframes provided on this sheet and in accordance with the approved plan and any additional requirements. Soil stabilization is defined as vegetative, physical or chemical coverage techniques that will restrain accelerated erosion on disturbed soils for temporary or permanent control needs.

NORTH CAROLINA *Environmental Quality*

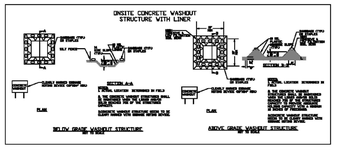

CONCRETE WASHOUTS

1. Do not discharge concrete or cement slurry from the site.
2. Dispose of, or recycle settled, hardened concrete residue in accordance with local and state solid waste regulations and at an approved facility.
3. Manage washout from mortar mixers in accordance with the above item and in addition place the mixer and associated materials on impervious barrier and within lot perimeter silt fence.
4. Install temporary concrete washouts per local requirements, where applicable. If an alternate method or product is to be used, contact your approval authority for review and approval. If local standard details are not available, use one of the two types of temporary concrete washouts provided on this detail.
5. Do not use concrete washouts for dewatering or storing defective curb or sidewalk sections. Stormwater accumulated within the washout may not be pumped into or discharged to the storm drain system or receiving surface waters. Liquid waste must be pumped out and removed from project.
6. Locate washouts at least 50 feet from storm drain inlets and surface waters unless it can be shown that no other alternatives are reasonably available. At a minimum, install protection of storm drain inlet(s) closest to the washout which could receive spills or overflow.
7. Locate washouts in an easily accessible area, on level ground and install a stone entrance pad in front of the washout. Additional controls may be required by the approving authority.
8. Install at least one sign directing concrete trucks to the washout within the project limits. Post signage on the washout itself to identify this location.
9. Remove leavings from the washout when at approximately 75% capacity to limit overflow events. Replace the tarp, sand bags or other temporary structural components when no longer functional. When utilizing alternative or proprietary products, follow manufacturer's instructions.
10. At the completion of the concrete work, remove remaining leavings and dispose of in an approved disposal facility. Fill pit, if applicable, and stabilize any disturbance caused by removal of washout.

HERBICIDES, PESTICIDES AND RODENTICIDES

1. Store and apply herbicides, pesticides and rodenticides in accordance with label restrictions.
2. Store herbicides, pesticides and rodenticides in their original containers with the label, which lists directions for use, ingredients and first aid steps in case of accidental poisoning.
3. Do not store herbicides, pesticides and rodenticides in areas where flooding is possible or where they may spill or leak into wells, stormwater drains, ground water or surface water. If a spill occurs, clean area immediately.
4. Do not stockpile these materials onsite.

HAZARDOUS AND TOXIC WASTE

1. Create designated hazardous waste collection areas on-site.
2. Place hazardous waste containers under cover or in secondary containment.
3. Do not store hazardous chemicals, drums or bagged materials directly on the ground.

NCG01 GROUND STABILIZATION AND MATERIALS HANDLING

EFFECTIVE: 04/01/19

SPILLS AND NON-STORMWATER CONTINGENCIES

CONSTRUCTION VEHICLES SHALL CLEAN MUD FROM THEIR TIRES AND BODY ON-SITE SO THAT THE SEDIMENT WILL FLOW TO THE WASH PIT NEAR THE CONSTRUCTION EXIT AND/OR THE SEDIMENT CONTROL DEVICES. ANY SEDIMENT THAT ENDS UP IN THE STREET OR OTHER PLACES OFFSITE SHALL BE CLEANED UP WITH A SHOVEL AND BROOM OR BE WASHED NOT OTHER MEANS BEFORE THE NEXT RAINFALL BUT SHALL AWAY USING WATER. THE CLEANED UP SEDIMENT SHALL BE PLACED BACK ONSITE OR TAKEN TO ANOTHER SITE WITH AN APPROVED AND FUNCTIONING SEDIMENT CONTROL PLAN.

VEHICLES AND EQUIPMENT SHALL BE FUELED ONSITE NEAR THE CONSTRUCTION EXIT IN A DESIGNATED CONTAINMENT AREA. CLEAN UP ANY FUEL SPILL IMMEDIATELY. CONTAMINATED SOILS WILL BE PLACED ON HEAVY PLASTIC AND COVERED OR PLACED IN APPROVED CONTAINERS TO PREVENT CONTACT WITH STORMWATER. ALL FUEL TANKS SHALL BE STORED IN THE CONTAINMENT AREA. ALL OIL, OTHER VEHICLE FLUIDS, SOLVENTS, PAINT, ETC. SHALL BE STORED IN A CONSTRUCTION TRAILER OR OTHER APPROVED CONTAINER.

ABSORBENT MATERIAL (FOR LAND BASED SPILLS), BOOMS (FOR SPILLS INTO WATERWAYS), AND OTHER HAZARDOUS MATERIAL CLEANUP TOOLS AS NECESSARY SHALL BE AVAILABLE FOR IMMEDIATE USE IF AN ONSITE SPILL OCCURS. IF A SPILL OF HAZARDOUS MATERIALS OCCURS, THE SPILL SHALL BE CONTAINED IMMEDIATELY AND THEN COMPLETELY CLEANED UP. IF THE SPILL HAS ENTERED A WATER SOURCE, SINKHOLE, STORM DRAIN, OR OTHER STORMWATER CONVEYANCE, THE LOCAL GOVERNMENTAL AUTHORITY SHALL BE CONTACTED IMMEDIATELY. ANY CONTAMINATED MATERIAL FROM THE CLEANUP SHALL BE DISPOSED OF IN ACCORDANCE WITH ALL STATE LAWS.

READY-MIX CONCRETE TRUCKS SHALL WASH OUT THEIR EQUIPMENT INTO A DESIGNATED WASH PIT NEAR THE CONSTRUCTION EXIT. THIS WASH PIT IS TO TRAP THE CONCRETE AND ITS WASH. THE CONTRACTOR SHALL MAINTAIN THIS PIT(S) AS NECESSARY TO ALWAYS HAVE AT LEAST 50%%% VOLUME. ANY MATERIAL REMOVED FROM THE WASH PIT SHALL BE USED FOR FILL MATERIAL ONSITE OR DISPOSED OF IN ACCORDANCE WITH ALL STATE AND FEDERAL REGULATIONS. WASH FROM THE CONCRETE TRUCKS AND ANY OVERFLOW FROM THE WASH PIT SHALL BE ALLOWED TO DISCHARGE TO A SEDIMENT BASIN, TRAP, POND, NOT STORM DRAIN, DITCH, STREAM, OTHER STORMWATER CONVEYANCE, OR TO WATERS OF THE STATE INCLUDING BOTH SURFACE AND GROUNDWATER.

ALL HAZARDOUS MATERIALS SUCH AS EMPTY OR PARTIALLY EMPTY PAINT CANS, OIL CANS, FILTERS, CLEANING FLUID, ETC. SHALL BE DISPOSED OF BY TAKING THEM TO A PERMITTED HAZARDOUS MATERIAL DISPOSAL SITE IN ACCORDANCE WITH STATE LAWS.

THE WASHING OF PAINT TOOLS OR OTHER HAZARDOUS MATERIAL EQUIPMENT MUST BE PERFORMED AND DISPOSED OF IN ACCORDANCE WITH ALL STATE AND FEDERAL REGULATIONS. THE CLEANING RESIDUE BE NOT FROM SUCH EQUIPMENT IS HAZARDOUS AND CAN DISCHARGED ONTO THE GROUND OR INTO A SEDIMENT BASIN, TRAP, POND, STORM DRAIN, DITCH, STREAM, OTHER STORMWATER CONVEYANCE, OR TO WATERS OF THE STATE INCLUDING BOTH SURFACE AND GROUNDWATER AND SHALL BE DISPOSED OF IN ACCORDANCE WITH STATE LAWS.

LITTER, CONSTRUCTION MATERIALS, CONSTRUCTION DEBRIS, CONSTRUCTION CHEMICALS, AND OTHER HAZARDOUS MATERIALS EXPOSED TO STORM WATER SHALL BE PICKED UP PRIOR TO ANTICIPATED STORM EVENTS OR BEFORE BEING CARRIED OFF OF THE SITE BY WIND (E.G., FORECASTED BY LOCAL WEATHER REPORTS), OR OTHERWISE PREVENTED FROM BECOMING A POLLUTANT SOURCE FOR STORM WATER DISCHARGES. LITTER, CONSTRUCTION MATERIALS, CONSTRUCTION DEBRIS, CONSTRUCTION CHEMICALS, AND OTHER HAZARDOUS MATERIALS SHALL NOT BE ALLOWED TO ENTER A SEDIMENT BASIN, TRAP, POND, STORM DRAIN, DITCH, STREAM, OTHER STORMWATER CONVEYANCE, OR TO WATERS OF THE STATE. THIS CAN BE ACCOMPLISHED BY SCREENING OUTFALLS, DAILY PICKUP OR CLEANUP, OR OTHER METHODS.

AFTER THEIR USE, MATERIALS USED FOR EROSION PREVENTION AND SEDIMENT CONTROL SHOULD BE REMOVED OR OTHERWISE PREVENTED FROM BECOMING A POLLUTANT SOURCE FOR STORM WATER DISCHARGES. CONTRACTOR IS RESPONSIBLE FOR LITTER CONTROL AND CLEANUP. SEDIMENT CONTROLS SHALL BE PROVIDED FOR ANY WATER DISTRIBUTION OR WASTE DISPOSAL SYSTEM ONSITE INCLUDING SANITARY SEWER OR SEPTIC SYSTEMS.

MATERIAL NOTES

1. CUT SOILS FOR TRAIL SECTIONS 1A & 1B, AND 2A WILL BE USED FOR FILL AND/OR STOCKPILED FOR REMOVAL AS SPECIFIED ON SHEET X1.1. CUT SOILS FOR TRAIL SECTIONS 2B AND 3 WILL BE USED FOR FILL AND/OR STOCKPILED FOR REMOVAL AS SPECIFIED ON SHEET X3.0. ANY TEMPORARY STOCKPILING SHOULD BE PROTECTED WITH SILT FENCE (CONTRACTOR RESPONSIBILITY) TO REDUCE RUNOFF. EXCESS SOILS SHOULD BE REMOVED FROM THE PROJECT SITE AND MOVED TO A PERMITTED LOCATION (SEE #2 BELOW).
2. ANY OFF-SITE BORROW AND/OR WASTE REQUIRED FOR THE PROJECT MUST COME FROM A SITE WITH AN APPROVED EROSION CONTROL PLAN, A SITE REGULATED UNDER THE MINING ACT OF 1971, OR A LANDFILL REGULATED BY THE DIVISION OF SOLID WASTE MANAGEMENT.
3. TRASH OR DEBRIS FROM DEMOLITION ACTIVITIES OR GENERATED BY ANY ACTIVITIES ON SITE MUST BE DISPOSED OF AT A FACILITY REGULATED BY THE DIVISION OF SOLID WASTE MANAGEMENT OR PER DIVISION OF SOLID WASTE MANAGEMENT OR DIVISION OF WATER RESOURCES RULES AND REGULATIONS.

STABILIZATION NOTES

1. STABILIZE DIVERSIONS WITH EROSION CONTROL MATTING (NORTH AMERICAN GREEN SC150BN OR EQUIV.) AND TEMP/AMEND/PERMANENT SEEDING. STABILIZE ALL 3:1 OR STEEPER SLOPES WITH EROSION CONTROL MATTING (NORTH AMERICAN GREEN SC150BN OR EQUIV.) AND TEMP/AMEND/PERMANENT SEEDING. INSTALL PER MANUFACTURER'S SPECIFICATIONS GIVEN IN ESC DETAILS.
2. TEMP/AMEND/PERMANENT SEEDING SPECIFICATIONS GIVEN IN DETAIL IN SHEET X4.6 AND PER THE STABILIZATION TIMELINE TABLE.

MAINTENANCE SCHEDULE/PLANS

1. INSPECT ALL ESC MEASURES WEEKLY AND AFTER EACH SIGNIFICANT RAINFALL EVENT (1/2" OR GREATER).
2. MAINTAIN ALL TEMPORARY BERMS AS NECESSARY TO SPECIFIED HEIGHT, THICKNESS, AND SIDESLOPES.
3. MAINTAIN THE TEMPORARY SLOPE DRAIN BY REMOVING ACCUMULATED SEDIMENT/DEBRIS TO ENSURE CLOGGING DOES NOT OCCUR.
4. MAINTAIN SKIMMER BASIN VIA SEDIMENT REMOVAL AT A MAXIMUM OF 50% OF BASIN STORAGE VOLUME, REPAIR/REPLACE BAFFLES IF CLOGGED OR TORN.
5. MAINTAIN SKIMMER DEVICE BY ENSURING THE VENT PIPE IS UPRIGHT AND NO CLOGGING HAS OCCURRED AT THE ORIFICE OPENING.
6. MAINTAIN SILT FENCES VIA SEDIMENT REMOVAL AS BULGES OCCUR OR WHEN SEDIMENT REACHES 50% OF FABRIC HEIGHT. REPAIR ANY TORN OR DISLODGE FENCE IMMEDIATELY.
7. MAINTAIN INLET PROTECTION BY REMOVING ACCUMULATED SEDIMENT/DEBRIS UPSLOPE/DOWNSLOPE. REPLACE MEASURES IMMEDIATELY IF CLOGGED OR TORN.
8. INSPECT RIPRAP APRONS AND INLET PROTECTION STRUCTURES FOR EROSION LATERALLY OR BENEATH STONE. REPLACE STONE AS NECESSARY IF DISLODGING OCCURS.
9. REPLACE MATTING AND STAPLES IF TORN OR DISLODGED FROM GROUND SURFACE.
10. RESEED AND PROVIDE SOIL AMENDMENTS AS NECESSARY TO MAINTAIN VEGETATED SURFACES.

ESC CONTACT: CARRIE CAVINESS OR SARAH KILBY WITH INTERFACE ENVIRONMENTAL CONSULTING – (919) 656-4543.

PREPARED BY:
INTERFACE ENVIRONMENTAL CONSULTING, LLC
476 HIDDEN POND ROAD
BOONE, NC 28607
919-656-4543
IEC

REVISIONS	DATE

PREPARED FOR: BLUE RIDGE CONSERVANCY

BOONE GORGE PARK ESC

ESC DETAILS AND CALCULATIONS

MIDDLE FORK GREENWAY
WATAUGA COUNTY, NC

SHEET X4.0

SPECIAL CONDITIONS

- MECHANICAL EQUIPMENT SHALL NOT IMPACT OR TRAVERSE WATERBODIES/WETLANDS, ASIDE FROM APPROVED IMPACTS FROM NCDEQ (401) AND USACE (404) ACTIVE PERMITS FOR THE PROJECT.
- THE CONTRACTOR IS RESPONSIBLE FOR MAINTAINING ALL EARTHEN BERMS AS THE SITE IS GRADED AND FOR MAINTAINING POSITIVE DRAINAGE TO STORMWATER MEASURES DURING CONSTRUCTION

ENGINEER & CONTRACTOR RESPONSIBILITIES

- TO NOTIFY THE NCDEQ LAND QUALITY INSPECTOR AT LEAST 48 HOURS BEFORE PROJECT STARTS,
- NO MAJOR GRADING ACTIVITIES OR BASIN CONSTRUCTION ARE TO TAKE PLACE DURING WET WEATHER OR PERIODS OF PREDICTED WET WEATHER,
- THAT ALL WORK WITHIN STREAMS, WETLANDS, OR RIPARIAN BUFFERS MUST BE STABILIZED AT THE END OF EACH WORK DAY.
- CLEARLY MARK UTILITY LINES AND MAINTAIN THROUGHOUT CONSTRUCTION UNTIL EQUIPMENT IS REMOVED FROM SITE. MINIMIZE ENCROACHMENTS NEAR GAS LINE/EASEMENT.
- INSTALL INLET PROTECTION BY THE END OF EACH WORK DAY FOR ALL CONSTRUCTED STORMWATER CULVERT INLETS,
- NOTIFY THE NCDEQ LAND QUALITY INSPECTOR WHEN PROJECT IS READY FOR CLOSEOUT INSPECTION,
- FILE FOR NPDES NCG010000 e-NOTICE OF TERMINATION (e-NOI) WHEN A FINAL CLOSEOUT INSPECTION REPORT IS RECEIVED FROM NCDEQ LAND QUALITY SECTION. G.S. 113A-57 (3).

RATIONAL METHOD Qpeak CALCULATIONS (25-YR)

Drainage Area ID	Drains To	Area (ac)	C	Peak Flow (Q, cfs)
Grate 100	P101, Grate 102	0.04	0.95	0.36
Grate 102	P103, Grate 104	0.02	0.95	0.19
Grate 104	P105	0.03	0.95	0.23
Grate 200	P201	0.03	0.54	0.13
Grate 300	P301, Grate 304	0.02	0.50	0.08
Grate 302	P303, Grate 304	0.12	0.95	0.98
Grate 304	P305, Grate 306	0.18	0.95	1.43
Grate 306	P307, Grate 314	0.08	0.95	0.64
Grate 308	P309, Grate 314	0.09	0.95	0.72
CI 202	P203, Grate 200	0.04	0.81	0.29
CI 204	P205, CI 202	0.05	0.95	0.38
Grate 310	P311, CT 316	0.09	0.95	0.72
CT 312	P312, Riser 314,	1.91	0.59	9.58
Riser Barrel 318	P319	5.10	0.60	25.95
Yard Inlet 400	P401	0.09	0.60	0.47
Yard Inlet 500	P501	0.05	0.60	0.26
Yard Inlet 600	P601	0.10	0.60	0.50
Existing DOT Grate 900	P901, P903, Box 904, P905	1.96	0.60	9.96
Box 904	P905	1.96	0.60	9.96
Pipe 701	--	8.46	0.60	29.05
Pipe 801	--	1.19	0.60	6.08
PD-1	--	0.62	0.60	3.14
PD-2	Inlet 316, P317, SB-1	1.25	0.60	6.36

Intensity - 25 yr, 5 min, NOAA - 8.48 in/hr (Boone Station); 25 yr, 15 min, NOAA - 5.72 in/hr (Pipe 701) (Boone Station)

TEMPORARY SLOPE DRAIN SCHEDULE

Drain	Area	Q_{10} (cfs)	HW/D	Pipe Type	Pipe Size
SD-1	0.26	1.181	<0.5	HDPE	12"
SD-2	0.28	1.264	<0.5	HDPE	12"

PERMANENT RIP RAP APRON SCHEDULE

Channel	Q_{100} (cfs)	V_{100} (f/s)	D_{50} (in)	D_{max} (in)	L_a (ft)	W_i (ft)	W_o (ft)	D (in)
RA-1	1.89	2.44	6	9	10	8	18	13.5
RA-2	0.93	5.67	6	9	10	3	11	13.5
RA-3	0.16	3.73	6	9	10	3	11	13.5
RA-5	34.63	12.52	12	18	13	7.5	15.5	27
RA-6	11.99	9.76	12	18	10	6	12	27
RA-7	3.45	10.38	12	18	15	4.5	16.5	27
RA-8	20.80	10.31	12	18	13	6	15	27
RA-9	0.57	5.49	6	9	10	1.5	10.5	13.5
RA-10	0.31	4.39	6	9	10	1.5	10.5	13.5
RA-11	0.61	5.37	6	9	10	1.5	10.5	13.5

PERMANENT DRAINAGE PIPE CALCULATIONS (100-YEAR)

Pipe	Q_{100}	Pipe Size (in)	Type	HW/D*
101	0.43	6"	PVC, SC40	0.44
103	0.23	6"	PVC, SC40	0.30
105	0.93	12"	HDPE	0.26
201	1.77	12"	HDPE	0.20
203	0.81	12"	HDPE	0.27
205	0.46	12"	HDPE	0.2
301	0.09	6"	HDPE	0.18
303	1.18	12"	HDPE	0.32
305	3.00	12"	HDPE	0.48
307	3.76	12"	HDPE	0.61
309	0.87	12"	HDPE	0.16
311	5.50	24"	HDPE	0.28
313	13.95	24"	HDPE	0.47
315	20.80	24"	HDPE	0.6
401	0.57	6"	HDPE	0.34
501	0.31	6"	HDPE	0.28
601	0.61	6"	HDPE	0.38
701	34.63	30"	HDPE	0.32
801	7.31	12"	HDPE	0.44
905	11.99	24"	HDPE	0.305

Intensity - 100 yr, 5 min, NOAA - 10.20 in/hr (Boone Station); 25 yr, 15 min, NOAA - 6.82 in/hr (Pipe 701) (Boone Station)

SKIMMER BASIN CALCULATIONS

	Skimmer Basin 1 (SB-1)
Peak Flow (Q=CIA)	
Drainage Area (ac)	5.10
Disturbed Area (ac)	4.37
T_c (min)	5
I (in/hr)	8.48
Disturbed "C"	0.60
Q_{25} (cfs)	25.95
Surface Area & Volume	
Req'd SA (ft^2)	8432.41
SA Provided (ft^2)	15352.00
Req'd Storage Volume (ft^3)*	7872.85
Volume Provided (ft^3)	21186.30
Basin Size & Attribute	
Bottom Elevation (ft)**	3144.00
Spillway Pipe Invert @ Inner Berm	3145.50
Length (ft) at WE	202.00
Width (ft) at WE	76.00
Inner Sideslopes (z)	3
Emerg Spillway Length (ft)	37.66
Emerg Spillway Elev (ft)	3146.00
Embankment Elev (ft)	3147.00
Total Depth (ft)	3.00
Baffles	
Baffle Spacing (ft from inlet)	50.5, 101, 151.5
Skimmer	
Dewatering in 3 days (cfd)	2624.28
Skimmer Size (in)	2.00
H Skimmer (ft)	0.17
Orifice Diameter (in)**	1.75
Float Arm (ft)	6.00
Skimmer Orifice Elevation (ft)	3145.50

*Calculated by Disturbed Area, not Dranage Area, when the two differed.

**Skimmer orifice diameter was calculated via www.fairclothskimmer.com/skimmer-sizing and checked procedurally using NCDEQ E&SC Manual, Section 6.64.1.

PERMANENT DIVERSION CALCULATIONS/SPECIFICATIONS

Channel ID	Drainage Area	Q_{25} (cfs)	V_{25} (fps)	Max Slope	Max Slope (%)	Length (ft)	Finished Top Width	Finished Depth	LINER (or EQUIV)
PD-1	PD-1	3.14	2.80	0.064	6.4	264	8.0	1.0	NAG SC150BN
PD-2	PD-2	6.36	1.87	0.016	1.6	381	15.0	1.5	NAG SC150BN

PREPARED BY:
INTERFACE ENVIRONMENTAL CONSULTING, LLC
476 HIDDEN POND ROAD
BOONE, NC 28607
919-656-4543

DATE

REVISIONS

PREPARED FOR: BLUE RIDGE CONSERVANCY

BOONE GORGE PARK ESC

ESC DETAILS AND CALCULATIONS

MIDDLE FORK GREENWAY
WATAUGA COUNTY, NC

SHEET
X4.1

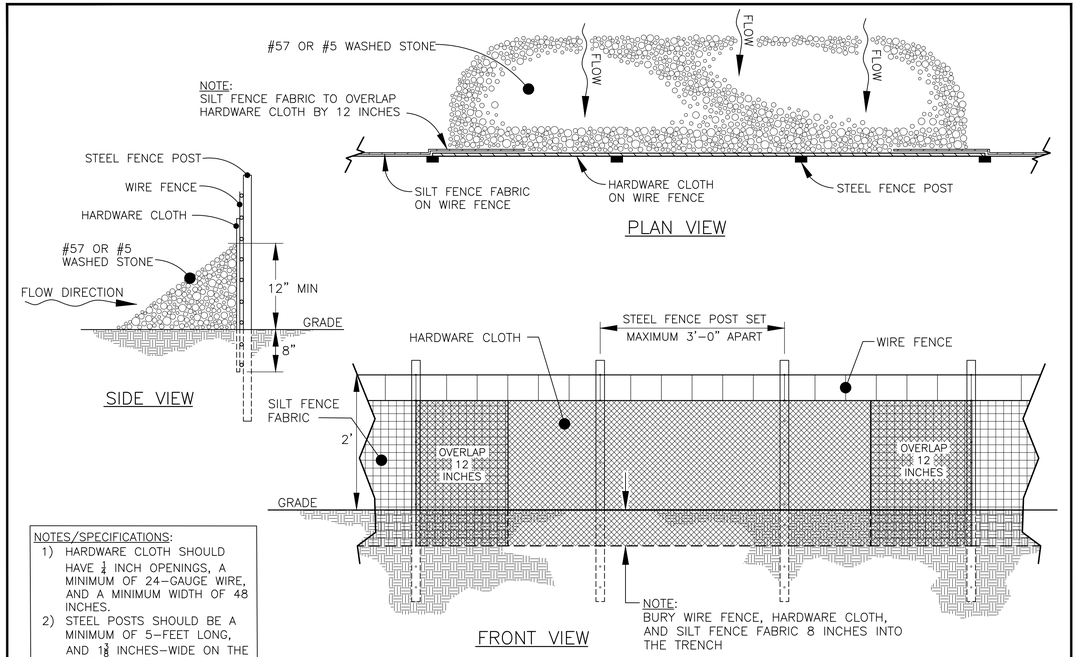

NOTES/SPECIFICATIONS:
1) HARDWARE CLOTH SHOULD HAVE ¼ INCH OPENINGS, A MINIMUM OF 24-GAUGE WIRE, AND A MINIMUM WIDTH OF 48 INCHES.
2) STEEL POSTS SHOULD BE A MINIMUM OF 5-FEET LONG, AND 1⅜ INCHES-WIDE ON THE FACE PARALLEL TO THE HARDWARE CLOTH

SILT FENCE W/ STONE BARRIER BREAK

(MODIFIED FROM TOWN OF CARY, NC DETAILS)

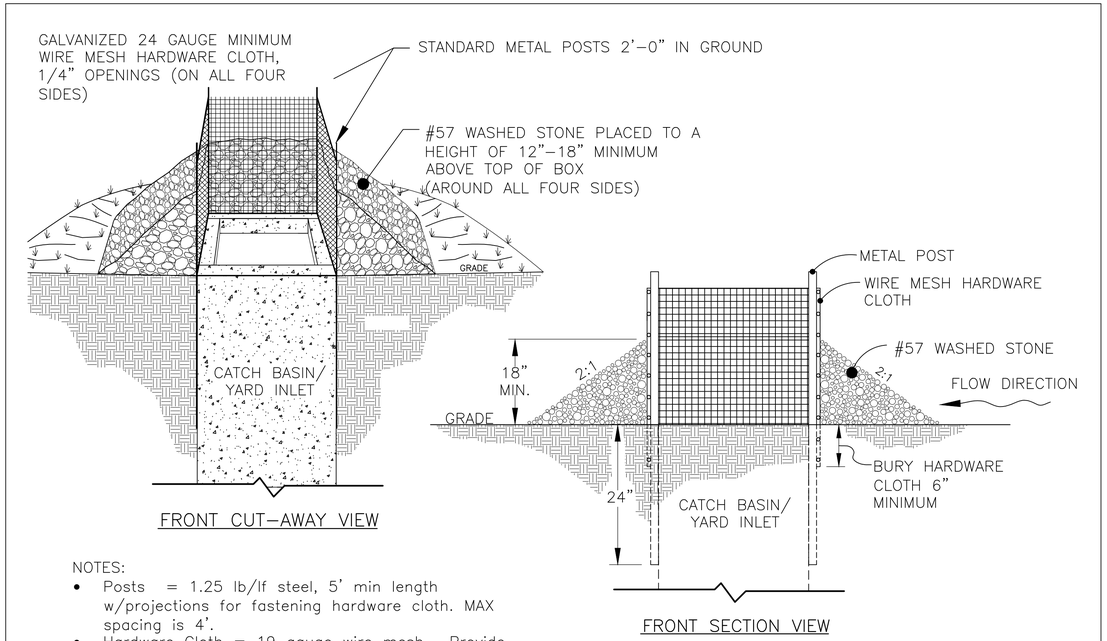

NOTES:
- Posts = 1.25 lb/lf steel, 5' min length w/projections for fastening hardware cloth. MAX spacing is 4'.
- Hardware Cloth = 19 gauge wire mesh. Provide a flap of cloth projecting away from inlet to aid in removal.

HARDWARE CLOTH & GRAVEL INLET PROTECTION

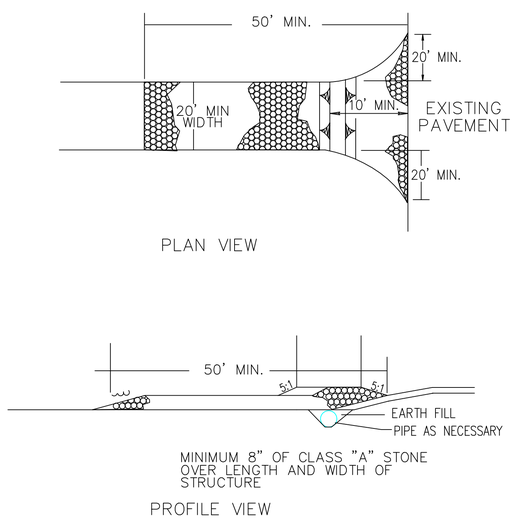

NOTES:
1. LOCATE CONSTRUCTION ENTRANCES AT EVERY POINT WHERE CONSTRUCTION TRAFFIC ENTERS OR LEAVES A CONSTRUCTION SITE. VEHICLES LEAVING THE SITE MUST TRAVEL OVER THE ENTIRE LENGTH OF THE STABILIZED CONSTRUCTION EXIT.
2. MAINTAIN IN A CONDITION WHICH WILL PREVENT TRACKING OR DIRECT FLOW OF MUD ONTO STREETS. PERIODIC TOPDRESSING OF STONE MAY BE NECESSARY.
3. ANY MATERIAL TRACKED ONTO ROADWAY MUST BE CLEANED UP IMMEDIATELY.

CONSTRUCTION SPECIFICATIONS:
1. PROVIDE A MINIMUM LENGTH OF 50'.
2. PROVIDE A MINIMUM WIDTH OF 20'. THE ENDS SHOULD BE FLARED AT THE EXISTING ROAD OR PAVEMENT TO PROVIDE AN ADEQUATE TURNING RADIUS. MAXIMUM SIDESLOPE OF STONE IS 3:1.
3. PLACE NCDOT TYPE 2 GEOTEXTILE OVER EXISTING GROUND PRIOR TO PLACING STONE.
4. ALL SURFACE WATER FLOWING TO OR DIVERTED TOWARD CONSTRUCTION ENTRANCE SHALL BE PIPED THROUGH ENTRANCE TO MAINTAIN POSITIVE DRAINAGE. PIPE INSTALLED THROUGH STABILIZED CONSTRUCTION ENTRANCE SHALL BE PROTECTED WITH A MOUNTABLE BERM WITH 5:1 SLOPES AND A MINIMUM OF 6" OF STONE OVER PIPE. WHEN THE ENTRANCE IS LOCATED AT A HIGH SPOT AND HAS NO DRAINAGE TO CONVEY A PIPE WILL NOT BE NECESSARY. PIPE SHOULD BE SIZED ACCORDING TO THE AMOUNT OF RUNOFF TO BE CONVEYED.

CONSTRUCTION ENTRANCE

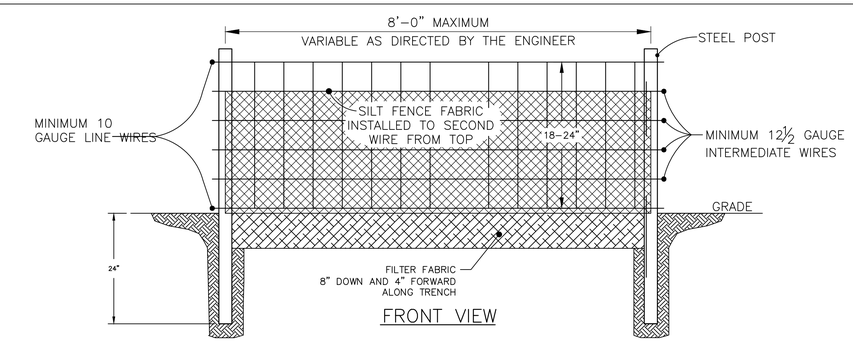

NOTES:
1) USE SILT FENCE ONLY WHEN DRAINAGE AREA DOES NOT EXCEED 1/4 ACRE PER 100 ft. OF FENCE AND NEVER IN AREAS OF CONCENTRATED FLOW.
2) OVERLAP 12 INCHES WHEN SPLICING FABRIC.

Temporary Silt Fence Material Property Requirements

	Test Material	Units	Supported Silt Fence	Un-Supported[1] Silt Fence	Type of Val
Grab Strength	ASTM D-4632	N (lbs)			
Machine Direction			400	550	MARV
			90	90	
X-Machine Direction			400	450	MARV
			90	90	
Permitivity[2]	ASTM D-4491	sec-1	0.05	0.05	
Apparent Opening Size	ASTM D-4751	mm	0.6	0.6	MARV
		US Sieve #	30	30	Max. ARV[3]
		% Retained		70% after 500h of	
Ultraviolet Stability	ASTM D-4355	Strength	70% after 500h of exposure	exposure	Typical

[1] Silt Fence support shall consist of 14 gage steel wire with a mesh spacing of 150 mm (6 inches), or prefabricated polymer mesh of equivalent strength

[2] These default values are based on empirical evidence with a variety of sediment. For environmentally sensitive areas, a review of previous experience and/or site or regionally specific geotextile tests in accordance with Test Method D-5141 should be performed by the agency to confirm suitability of these requirements.

[3] As Measured in accordance with Method D-4823

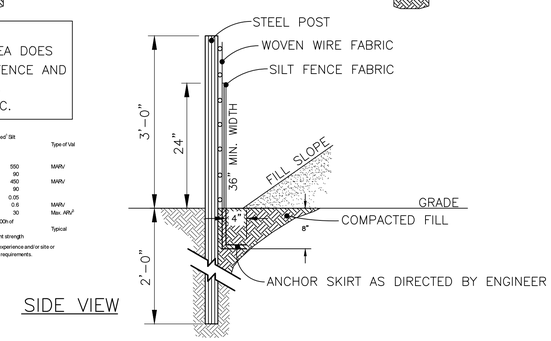

STANDARD TEMPORARY SILT FENCE

(MODIFIED FROM TOWN OF CARY, NC DETAILS)

PREPARED BY:
INTERFACE ENVIRONMENTAL CONSULTING, LLC
476 HIDDEN POND ROAD
BOONE, NC 28607
919-656-4543

REVISIONS	DATE

PREPARED FOR: BLUE RIDGE CONSERVANCY

BOONE GORGE PARK
ESC DETAILS
MIDDLE FORK GREENWAY
WATAUGA COUNTY, NC

SHEET X4.2

2" Faircloth Skimmer® Cut Sheet

www.FairclothSkimmer.com

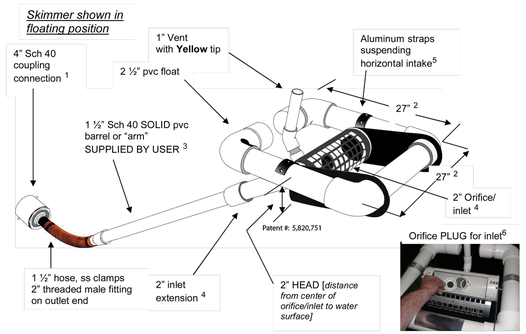

1. Skimmer can be attached to a straight 4" sch 40 pipe but the pipe may need to be anchored to the bottom at the connection so it is secure. Coupling can be removed and hose attached to outlet using the threaded 2" fitting.
2. Dimensions are approximate, not intended as plans for construction.
3. Barrel (solid, not foam core pipe) should be 1.4 times the depth of water with a minimum length of 6' so the inlet can be pulled to the side for maintenance. If more than 8' long, weight may have to be added to inlet to counter the increased buoyancy.
4. Orifice/inlet tapers down from 2" maximum inlet to a 1 ½" barrel and hose. Barrel is smaller to reduce buoyancy and tendency to lift inlet but is sufficient for flow through inlet because of slope. The orifice/inlet can be reduced using the plug and cutter provided to control the outflow rate – see #6.
5. Horizontal intake is 4" pipe between the straps with aluminum screen door for access to the inlet and orifice inside.
6. **Capacity:** 3,283 cubic feet per day maximum with 2" inlet and 2" head. Inlet can be reduced by installing a smaller orifice using the plug and cutter provided to adjust flow rate for the particular drawdown time required. Please use the sizing template available at www.fairclothskimmer.com .
7. Ships assembled. User glues inlet extension and barrel, installs vent, cuts orifice in plug and attaches to outlet pipe or structure. Includes float, flexible hose with fittings, rope, orifice plug & cutter. Does **NOT** include 1 ½" Sch 40 SOLID pvc barrel or "arm" SUPPLIED BY USER.

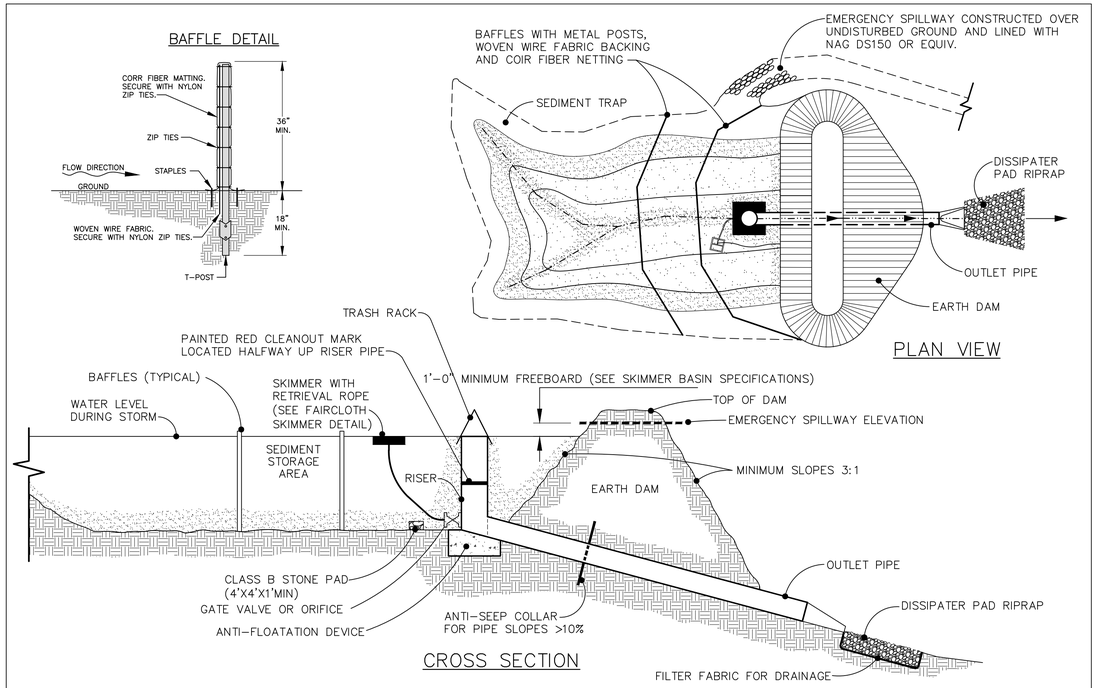

STANDARD RISER-BARREL SEDIMENT BASIN (WITH SKIMMER)

(MODIFIED FROM TOWN OF CARY, NC DETAILS)

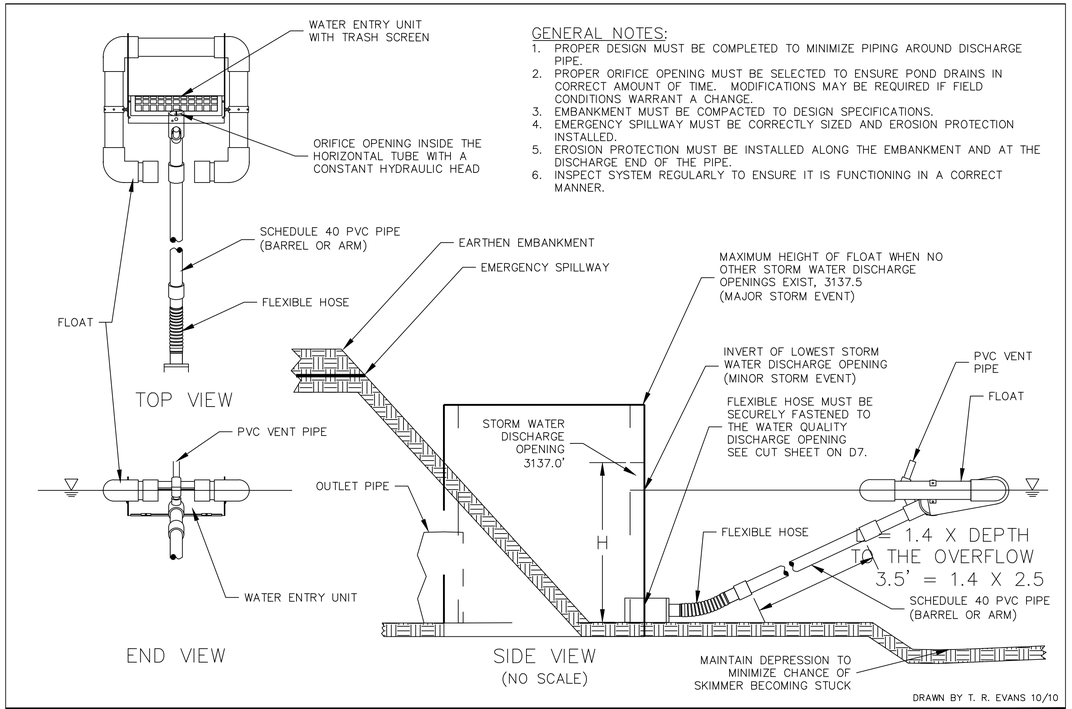

GENERAL NOTES:

1. PROPER DESIGN MUST BE COMPLETED TO MINIMIZE PIPING AROUND DISCHARGE PIPE.
2. PROPER ORIFICE OPENING MUST BE SELECTED TO ENSURE POND DRAINS IN CORRECT AMOUNT OF TIME. MODIFICATIONS MAY BE REQUIRED IF FIELD CONDITIONS WARRANT A CHANGE.
3. EMBANKMENT MUST BE COMPACTED TO DESIGN SPECIFICATIONS.
4. EMERGENCY SPILLWAY MUST BE CORRECTLY SIZED AND EROSION PROTECTION INSTALLED.
5. EROSION PROTECTION MUST BE INSTALLED ALONG THE EMBANKMENT AND AT THE DISCHARGE END OF THE PIPE.
6. INSPECT SYSTEM REGULARLY TO ENSURE IT IS FUNCTIONING IN A CORRECT MANNER.

DRAWN BY T. R. EVANS 10/10

FAIRCLOTH SKIMMER® DISCHARGE SYSTEM WITH OUTLET STRUCTURE

J. W. FAIRCLOTH & SON INC.
WWW.FAIRCLOTHSKIMMER.COM
TELEPHONE: (919) 732-1244
FAX: (919) 732-1266
EMAIL: WARREN@FAIRCLOTHSKIMMER.COM

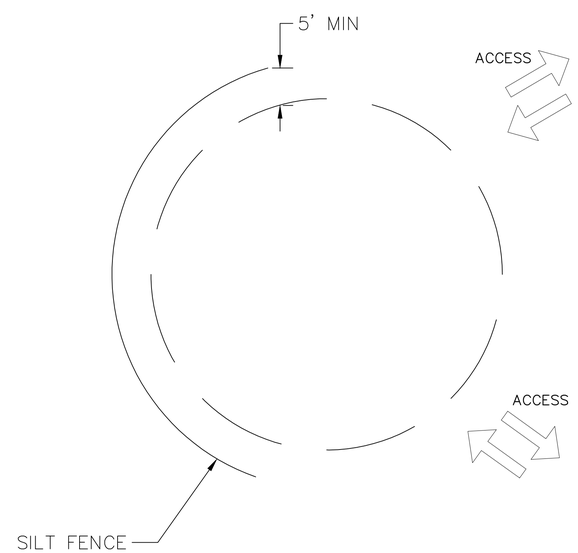

NOTES:

1. SOIL STOCKPILES MUST BE LOCATED AS SPECIFIED ON THE APPROVED ESC PLAN.
2. DOWNSLOPE AREAS OF THE STOCKPILE MUST BE PROTECTED WITH SILT FENCE OR ADDITIONAL PROTECTIONS AS SPECIFIED BY THE ENGINEER.
3. SILT FENCE SHALL BE LOCATED A MIN OF 5 FT FROM THE TOE OF THE STOCKPIILE.
4. ACCESS TO STOCKPILE AREAS SHALL BE DICTATED BY THE LOCATION OF ADJACENT SILT FENCE AND SITE DRAINAGE PATTERNS. THIS WILL BE SPECIFIED BY THE ENGINEER ON A PROJECT BY PROJECT BASIS.
5. PROTECT TOPSOIL STOCKPILES BY TEMP SEEDING NO MORE THAN 21 CALENDAR DAYS AFTER THE FORMATION OF THE STOCKPILE.

SOIL/TOPSOIL STOCKPILE

NOT TO SCALE

PREPARED BY:
INTERFACE ENVIRONMENTAL CONSULTING, LLC
IEC
476 HIDDEN POND ROAD
BOONE, NC 28607
919-656-4543

REVISIONS	DATE

PREPARED FOR: BLUE RIDGE CONSERVANCY

BOONE GORGE PARK

ESC DETAILS

MIDDLE FORK GREENWAY
WATAUGA COUNTY, NC

SHEET X4.3

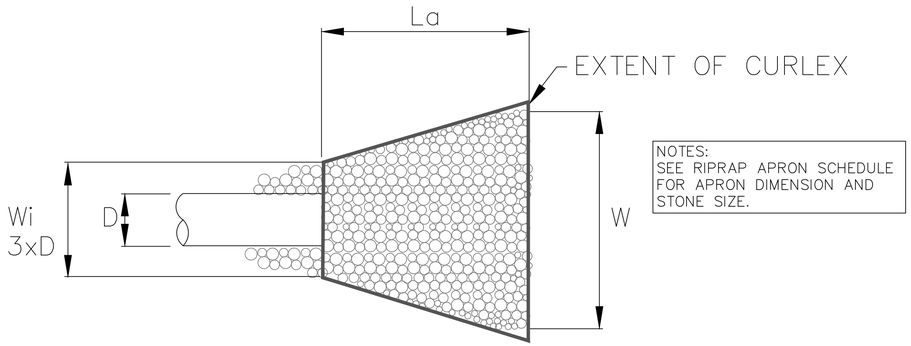

NOTES:
SEE RIPRAP APRON SCHEDULE FOR APRON DIMENSION AND STONE SIZE.

D = PIPE DIA. IN INCHES

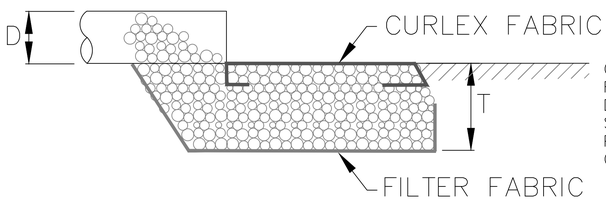

CURLEX FABRIC TO BE REMOVED AFTER DOWNLSOPE AREAS ARE STABILIZED WITH PERMANENT GROUND COVER.

RIPRAP APRON DISSIPATOR

NOT TO SCALE

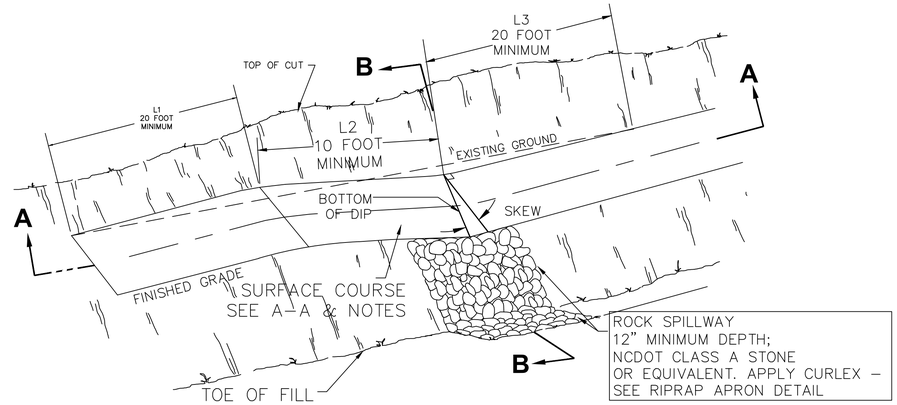

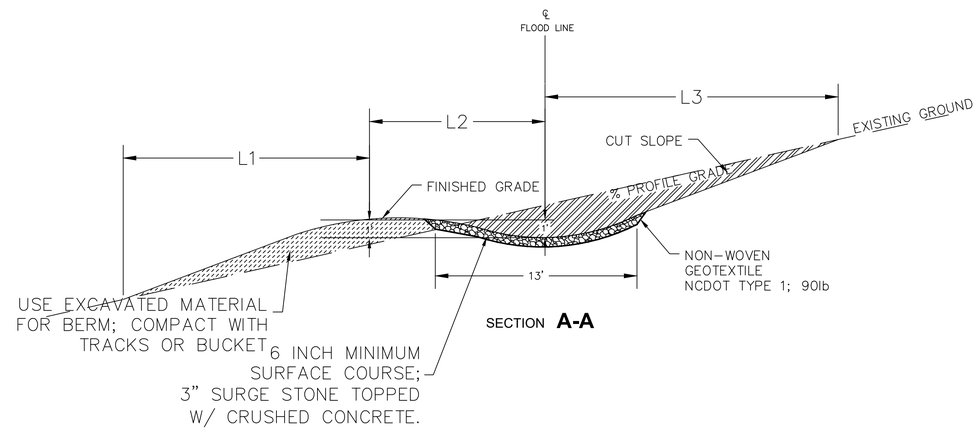

SECTION **A-A**

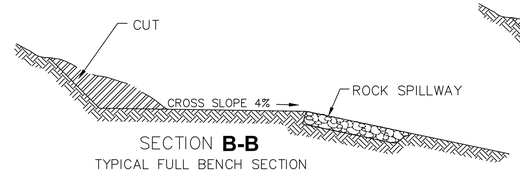

SECTION **B-B**
TYPICAL FULL BENCH SECTION

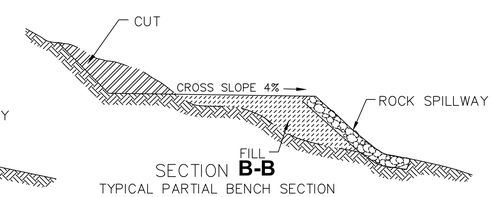

SECTION **B-B**
TYPICAL PARTIAL BENCH SECTION

NOTES:
1. DRAIN DIPS WILL BE STAKED IN THE FIELD AND LOCATIONS ADJUSTED AS NECESSARY TO ENSURE ADEQUATE TRAIL SLOPES AND DOWNSLOPE PROTECTION.
2. ROCK SPILLWAY SLOPE SHALL BE THE SAME AS THE NATURAL GROUND SLOPE OR CONSTRUCTED FILL SLOPE.
3. APPLY SURFACE COARSE WHEN CONSTRUCTING IN PARTIAL BENCH OR FULL BENCH SOFT SOILS.
4. ROCK SPILLWAY SHALL EXTEND A MIN. 6' FROM EDGE OF TRAIL IN FULL BENCH CUT; SPILLWAY SHALL EXTEND 2' PAST FILL SLOPE IN PARTIAL BENCH CUT.

TRAIL GRADE DIP

ADAPTED FROM USFS STD 927–01/02

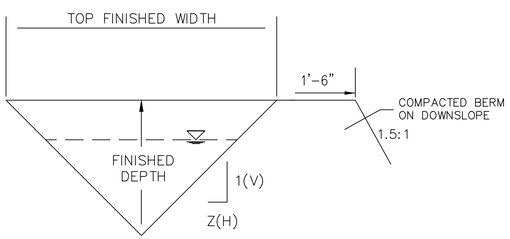

NOTES:
LINE DIVERSION DITCHES WITH NAG S75BN OR EQUIV. SEE PERMANENT DIVERSION CALCULATIONS FOR SIZING ON SHEET X4.1.

DIVERSION DITCHES

ROLLMAX™
ROLLED EROSION CONTROL

Specification Sheet – BioNet® S75BN™ Erosion Control Blanket

DESCRIPTION

The short-term single net erosion control blanket shall be a machine-produced mat of 100% agricultural straw with a functional longevity of up to 12 months. (NOTE: functional longevity may vary depending upon climatic conditions, soil, geographical location, and elevation). The blanket shall be of consistent thickness with the straw evenly distributed over the entire area of the mat. The blanket shall be covered on the top side with a 100% biodegradable woven natural organic fiber net. The netting shall consist of machine directional strands formed from two intertwined yarns with across directional strands interwoven through the twisted machine strands (commonly referred to as a Leno weave) to form approximate 0.50 x 1.0 in. (1.27 x 2.54 cm) mesh. The blanket shall be sewn together on 1.50 inch (3.81 cm) centers with degradable thread. The blanket shall be manufactured with a colored thread stitched along both outer edges (approximately 2-5 inches [5-12.5 cm] from the edge) as an overlap guide for adjacent mats.

The S75BN shall meet Type 2.C specification requirements established by the Erosion Control Technology Council (ECTC) and Federal Highway Administration's (FHWA) FP-03 Section 713.17

Material Content		
Matrix	100% straw fiber	0.5 lbs/sq yd (0.27 kg/sm)
Netting	Top side only: Leno woven 100% biodegradable natural organic fiber	9.3 lbs/1000 sq ft (4.5 kg/100 sm)
Thread	Biodegradable	

Standard Roll Size	
Width	6.67 ft (2.0 m)
Length	108 ft (32.92 m)
Weight ± 10%	46.4 lbs (21.05 kg)
Area	80 sq yd (66.9 sm)

Design Permissible Shear Stress	
Unvegetated Shear Stress	1.60 psf (76 Pa)
Unvegetated Velocity	5.00 fps (1.52 m/s)

Index Property	Test Method	Typical
Thickness	ASTM D6525	0.29 in. (7.37 mm)
Resiliency	ECTC Guidelines	81.4%
Water Absorbency	ASTM D1117	440%
Mass/Unit Area	ASTM D6475	9.12 oz/sy (310 g/sm)
Swell	ECTC Guidelines	15.7%
Smolder Resistance	ECTC Guidelines	Yes
Stiffness	ASTM D1388	6.92 oz-in
Light Penetration	ASTM D6567	9.1%
Tensile Strength - MD	ASTM D6818	146.4 lbs/ft (2.17 kN/m)
Elongation - MD	ASTM D6818	10.9%
Tensile Strength - TD	ASTM D6818	109.2 lbs/ft (1.62 kN/m)
Elongation - TD	ASTM D6818	14.3%
Biomass Improvement	ASTM D7322	398%

Slope Design Data: C Factors			
	Slope Gradients (S)		
Slope Length (L)	≤ 3:1	3:1 - 2:1	≥ 2:1
≤ 20 ft (6 m)	0.029	N/A	N/A
20-50 ft	0.11	N/A	N/A
≥ 50 ft (15.2 m)	0.19	N/A	N/A

Roughness Coefficients – Unveg.	
Flow Depth	Manning's n
≤ 0.50 ft (0.15 m)	0.055
0.50 – 2.0 ft	0.055-0.021
≥ 2.0 ft (0.60 m)	0.021

NORTH AMERICAN GREEN

North American Green
5401 St. Wendel-Cynthiana Road
Poseyville, Indiana 47633

nagreen.com
800-772-2040

©2017, North American Green is a registered trademark. Certain products and/or applications covered by one or more patents or patent applications may be used under license. Certain patents are pending, and certain foreign patents and patent applications may also exist. Trademark rights also apply as indicated herein. Final determination of the suitability of any information or material for the use contemplated, and its manner of use, is the sole responsibility of the user. Printed in the U.S.A.

EC_RMX_MPDS_BS75BN_6.13

PREPARED BY:
INTERFACE ENVIRONMENTAL CONSULTING, LLC
476 HIDDEN POND ROAD
BOONE, NC 28607
919-656-4543

REVISIONS	DATE

PREPARED FOR: BLUE RIDGE CONSERVANCY

BOONE GORGE PARK
ESC DETAILS
MIDDLE FORK GREENWAY
WATAUGA COUNTY, NC

SHEET
X4.4

Temporary Bridge

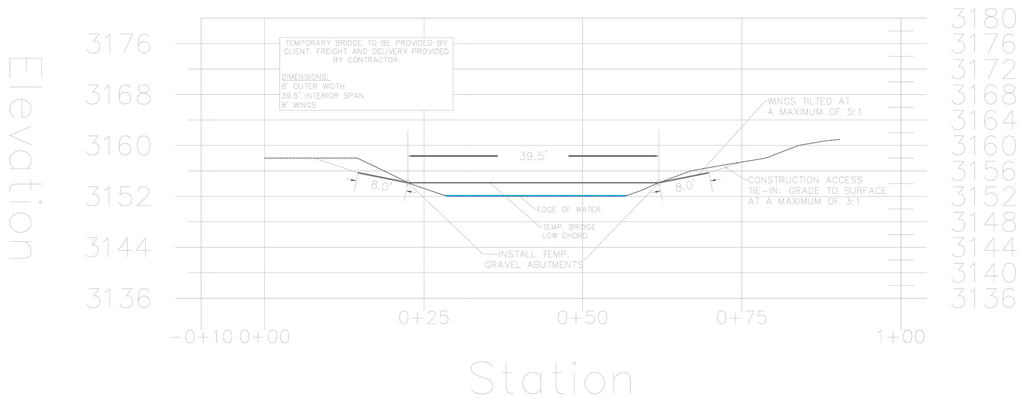

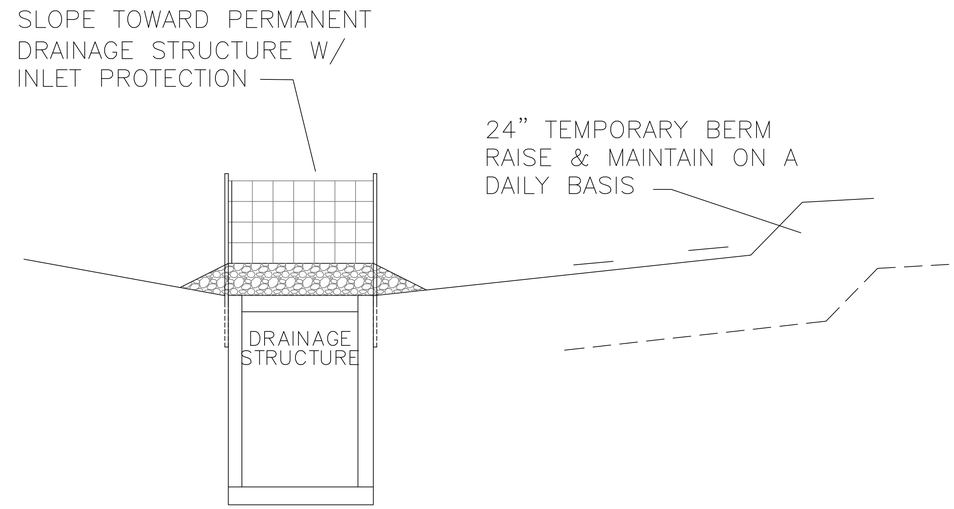

TEMPORARY EARTHEN BERM

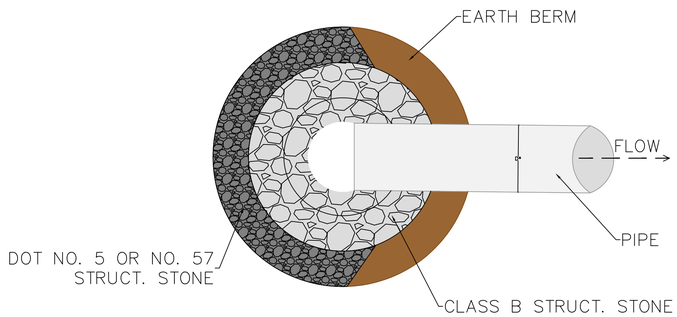

PLAN VIEW

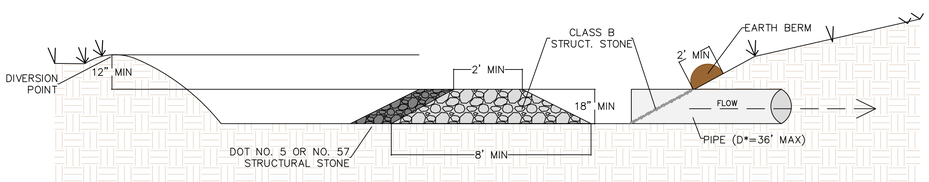

PROFILE VIEW

ROCK PIPE INLET SEDIMENT TRAP, TYPE A

NOT TO SCALE

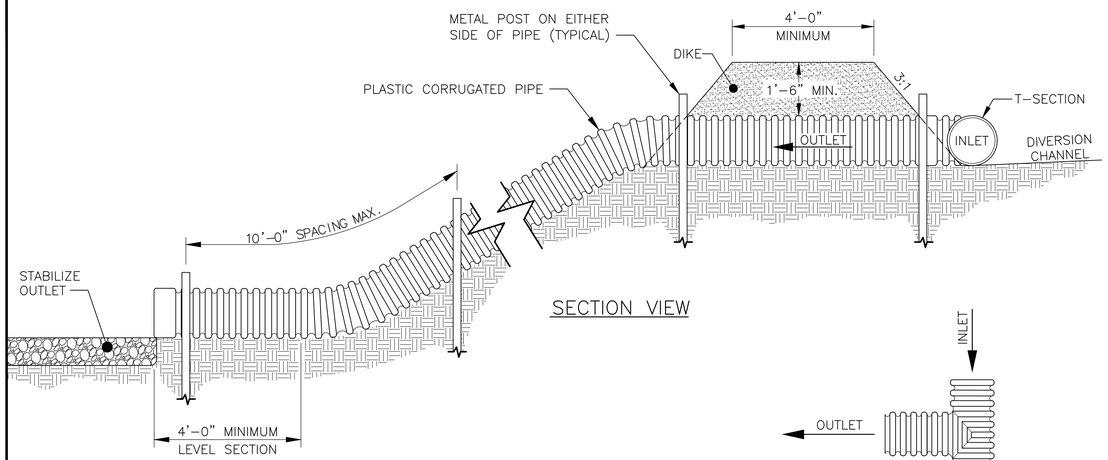

SECTION VIEW

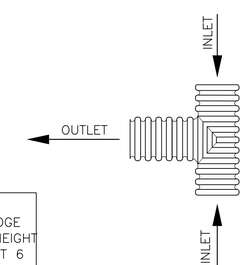

T-SECTION PLAN VIEW

NOTES:
1. TEMPORARY DIVERSION: GENERALLY, USE AN EARTHEN DIVERSION WITH A DIKE RIDGE TO DIRECT SURFACE RUNOFF INTO THE TEMPORARY SLOPE DRAIN. MAKE THE HEIGHT OF THE RIDGE OVER THE DRAIN CONDUIT A MINIMUM OF 1.5 FEET AND AT LEAST 6 INCHES HIGHER THAN THE ADJOINING RIDGE ON EITHER SIDE. THE LOWEST POINT OF THE DIVERSION RIDGE SHOULD BE A MINIMUM OF 1 FOOT ABOVE THE TOP OF THE DRAIN SO THAT DESIGN FLOW CAN FREELY ENTER THE PIPE.
2. OUTLET PROTECTION: PROTECT THE OUTLET OF THE SLOPE DRAIN FROM EROSION.
3. MINIMUM OF 10 INCH PIPE OR GREATER BASED ON AREA OF DRAINAGE.

STANDARD TEMPORARY SLOPE DRAIN

(MODIFIED FROM TOWN OF CARY, NC DETAILS)

PREPARED BY:
INTERFACE ENVIRONMENTAL CONSULTING, LLC
476 HIDDEN POND ROAD
BOONE, NC 28607
919-656-4543
IEC

REVISIONS	DATE

PREPARED FOR: BLUE RIDGE CONSERVANCY

BOONE GORGE PARK

ESC DETAILS
MIDDLE FORK GREENWAY
WATAUGA COUNTY, NC

SHEET X4.5

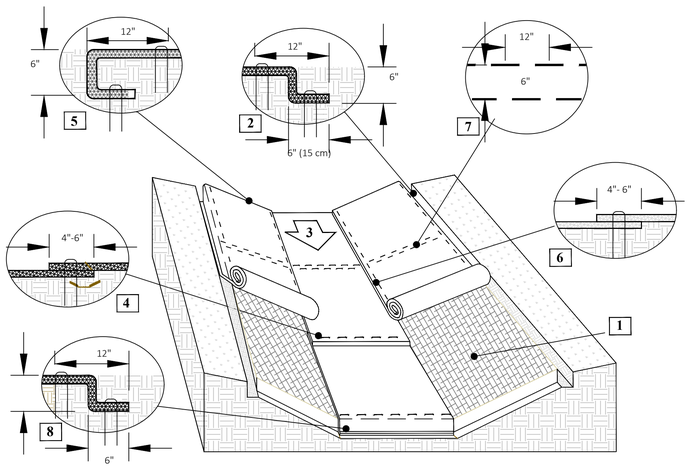

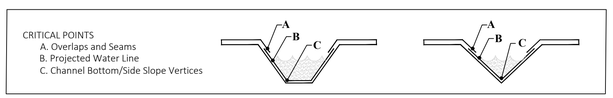

NOTES:
*Horizontal staple spacing should be altered if necessary to allow staples to secure the critical points along the channel surface.

INSTRUCTIONS

1. PREPARE SOIL BEFORE INSTALLING ROLLED EROSION CONTROL PRODUCTS (RECPS), INCLUDING ANY NECESSARY APPLICATION OF LIME, FERTILIZER, AND SEED. GROUND SURFACE MUST BE FREE OF DEBRIS, ROCKS, CLAY CLODS AND RAKED SMOOTH SUFFICIENT TO ALLOW INTIMATE CONTACT OF THE RECP WITH THE SOIL OVER THE ENTIRETY OF THE INSTALLATION.
2. BEGIN AT THE TOP OF THE CHANNEL BY ANCHORING THE RECPS IN A 6" (15 CM) DEEP X 6" (15 CM) WIDE TRENCH WITH APPROXIMATELY 12" (30 CM) OF RECPS EXTENDED BEYOND THE UP-SLOPE PORTION OF THE TRENCH. USE SHOREMAX MAT AT THE CHANNEL/CULVERT OUTLET AS SUPPLEMENTAL SCOUR PROTECTION AS NEEDED. ANCHOR THE RECPS WITH A ROW OF STAPLES/STAKES/PINS APPROXIMATELY 12" (30 CM) APART IN THE BOTTOM OF THE TRENCH. BACKFILL AND COMPACT THE TRENCH AFTER STAPLING. APPLY SEED TO THE COMPACTED SOIL AND FOLD THE REMAINING 12" (30 CM) PORTION OF RECPS BACK OVER THE SEED AND COMPACTED SOIL. SECURE RECPS OVER COMPACTED SOIL WITH A ROW OF STAPLES/STAKES/PINS SPACED APPROXIMATELY 12" (30 CM) APART ACROSS THE WIDTH OF THE RECPS.
3. ROLL CENTER RECPS IN DIRECTION OF WATER FLOW IN BOTTOM OF CHANNEL. RECPS WILL UNROLL WITH APPROPRIATE SIDE AGAINST THE SOIL SURFACE. ALL RECPS MUST BE SECURELY FASTENED TO SOIL SURFACE BY PLACING STAPLES/STAKES/PINS IN APPROPRIATE LOCATIONS AS SHOWN IN THE STAPLE PATTERN GUIDE.
4. PLACE CONSECUTIVE RECPS END-OVER-END (SHINGLE STYLE) WITH A 4"- 6" (10 - 15 CM) OVERLAP. USE A DOUBLE ROW OF STAPLES STAGGERED 4" APART AND 4" ON CENTER TO SECURE RECPS.
5. FULL LENGTH EDGE OF RECPS AT TOP OF SIDE SLOPES MUST BE ANCHORED WITH A ROW OF STAPLES/STAKES/PINS SPACED AT S_T APART IN A 6" (15 CM) DEEP X 6"(15 CM) WIDE TRENCH. BACKFILL AND COMPACT THE TRENCH AFTER STAPLING.
6. ADJACENT RECPS MUST BE OVERLAPPED APPROXIMATELY 4"-6" (10 - 15 CM) AND SECURED WITH STAPLES/STAKES/PINS AT S_T.
7. IN HIGH FLOW CHANNEL APPLICATIONS A STAPLE CHECK SLOT IS RECOMMENDED AT 30 TO 40 FOOT (9 -12M) INTERVALS. USE A DOUBLE ROW OF STAPLES STAGGERED 6" (15 CM) APART AND 12" (30 CM) ON CENTER OVER ENTIRE WIDTH OF THE CHANNEL.
8. THE TERMINAL END OF THE RECPS MUST BE ANCHORED WITH A ROW OF STAPLES/STAKES/PINS SPACED AT S_T APART IN A 6" (15 CM) DEEP X 6" (15 CM) WIDE TRENCH. BACKFILL AND COMPACT THE TRENCH AFTER STAPLING.
9. FASTENERS SHOULD PROVIDE A MINIMUM OF TWENTY POUNDS OF PULLOUT RESISTANCE. SIX-INCH (10 CM) X ONE-INCH (2.5 CM) ELEVEN GAUGE STAPLES ARE TYPICALLY ADEQUATE. IN LOOSE SOILS, LONGER STAPLES MAY BE NECESSARY, TWIST PINS CAN PROVIDE THE GREATEST PULLOUT RESISTANCE. IN HARD OR ROCKY SOILS, STRAIGHT PINS MAY BY USED WHERE STAPLES OR TWIST PINS ARE REFUSED, PROVIDED THE MINIMUM PULLOUT REQUIREMENTS ARE MET. BIO-DEGRADABLE FASTENERS SHALL NOT BE USED WITH VMAX (TRM) OR TMAX (HPTRM) MATERIALS.

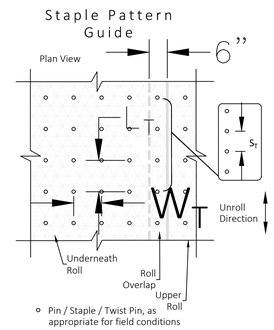

	Staple Pattern
Dimension	E
W_T	20"
L_T	20"
S_T	18"
Nominal Frequency	3.8 / SY

SEEDING NOTES

ALL DISTURBED AREAS SHALL BE SEEDED WITH THE APPROPRIATE SEED/AMENDMENT MIXTURE AND TACKING (INSTALLER TO SPECIFY). RESEED AS NECESSARY TO ESTABLISH A VIGOROUS GROUNDCOVER OF TEMPORARY AND PERMANENT GRASS.

SEE LANDSCAPE PLANS FOR PERMANENT SEED MIXES SPECIFIC TO: STREAM RESTORATION AREAS, MEADOW, AND STORMWATER WETLAND.

TEMPORARY SEEDING SPECIFICATIONS

SEEDING MIXTURE:

SPECIES	RATE (lb/acre)
RYE (grain)	120
GERMAN MILLET	120

SEEDING DATES:
RYE - AUG 15 TO MAY 1
MILLET - MAY 1 TO AUG 15

SOIL ADMENDMENTS:
FOLLOW RECOMMENDATIONS OF SOIL TESTS OR APPLY 2000 lb/ac GROUND AGRICULTURAL LIMESTONE AND 750 lb/ac 10-10-10 FERTLIZER.

MULCH:
APPLY 4000lb/ac STRAW. ANCHOR STRAW BY TACKING w/ ASPHALT, NETTING, OR A MULCH ANCHORING TOOL. A DISK w/ BLADES SER NEARLY STRAIGHT CAN BE USED AS A MULCH ANCHORING TOOL.

MAINTENANCE:
RE-FERTILIZE IF GROWTH IS NOT FULLY ADEQUATE, RE-SEED, RE-FERTILIZE AND MULCH IMMEDIATELY FOLLOWING EROSION OR OTHER DAMAGE.

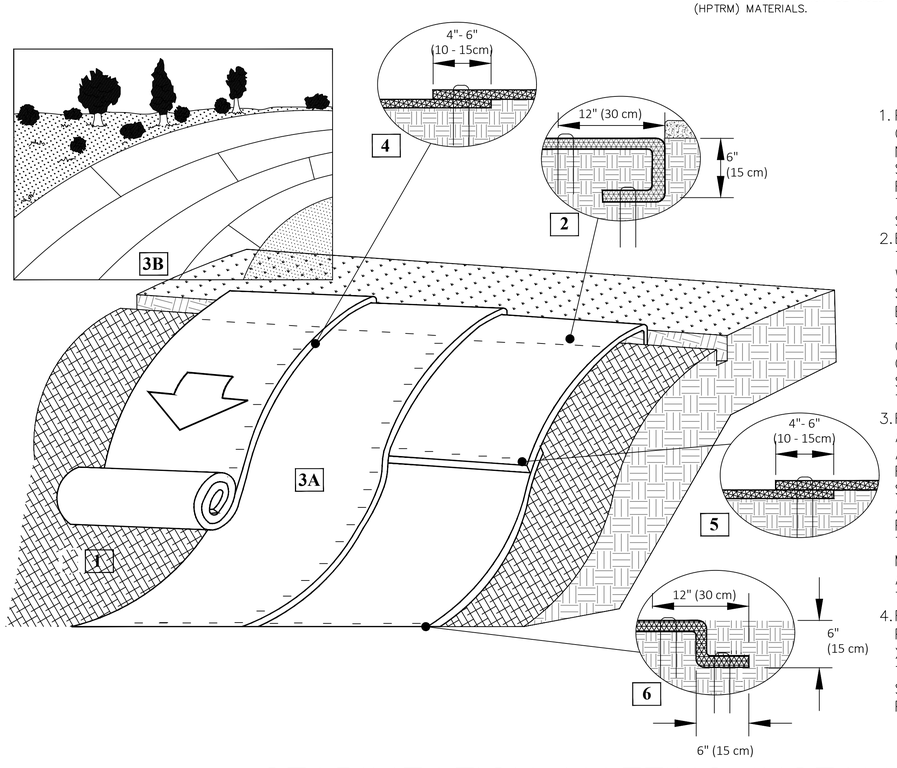

INSTRUCTIONS

1. PREPARE SOIL BEFORE INSTALLING ROLLED EROSION CONTROL PRODUCTS (RECPS), INCLUDING ANY NECESSARY APPLICATION OF LIME, FERTILIZER, AND SEED. GROUND SURFACE MUST BE FREE OF DEBRIS, ROCKS, CLAY CLODS AND RAKED SMOOTH SUFFICIENT TO ALLOW INTIMATE CONTACT OF THE RECP WITH THE SOIL OVER THE ENTIRETY OF THE INSTALLATION.
2. BEGIN AT THE TOP OF THE SLOPE BY ANCHORING THE RECPS IN A 6" (15 CM) DEEP X 6" (15 CM) WIDE TRENCH. ANCHOR THE RECPS WITH A ROW OF STAPLES/STAKES/PINS SPACED AT S_T APART IN THE BOTTOM OF THE TRENCH. BACKFILL AND COMPACT THE TRENCH AFTER STAPLING AND FOLD THE ROLL OVER DOWNSLOPE. SECURE RECPS OVER COMPACTED SOIL WITH A ROW OF STAPLES/STAKES/PINS SPACED AT S_T APART ACROSS THE WIDTH OF THE RECPS.
3. ROLL THE RECPS (A) DOWN OR (B) HORIZONTALLY ACROSS THE SLOPE. RECPS WILL UNROLL WITH APPROPRIATE SIDE AGAINST THE SOIL SURFACE. ALL RECPS MUST BE SECURELY FASTENED TO SOIL SURFACE BY PLACING STAPLES/STAKES/PINS IN APPROPRIATE LOCATIONS AS SHOWN IN THE STAPLE PATTERN GUIDE. CONSECUTIVE RECPS SPLICED DOWN THE SLOPE MUST OVERLAPPED WITH THE UPSTREAM MAT ATOP THE DOWNSTREAM MAT (SHINGLE STYLE). AT THE TERMINAL END, SECURE EACH MAT ACROSS THE WIDTH WITH A ROW OF STAPLES/STAKES/PINS.
4. FASTENERS SHOULD PROVIDE A MINIMUM OF TWENTY POUNDS OF PULLOUT RESISTANCE. SIX-INCH (10 CM) X ONE-INCH (2.5 CM) ELEVEN GAUGE STAPLES ARE TYPICALLY ADEQUATE. IN LOOSE SOILS, LONGER STAPLES MAY BE NECESSARY, TWIST PINS CAN PROVIDE THE GREATEST PULLOUT RESISTANCE.

STABILIZATION MATTING INSTALLATION

CUT / FILL SLOPES, OPEN AREAS & SWALES

PERMANENT SEEDING SPECIFICATION

SEEDING MIXTURE:

SPECIES	RATE (lb/ac)
TALL FESCUE	175-200 (3 lb/1000 sq ft)
KENTUCKY BLUEGRASS	20 (1 lb/1000 sq ft)

NURSE PLANTS:
BETWEEN MAY 1 AND AUG 15, ADD 10 lb/ac GERMAN MILLET OR 15 lb/ac SUDANGRASS, PRIOR TO MAY 1 OR AFTER AUG 15, ADD 40 lb/ac RYE (GRAIN).

SOIL ADMENDMENTS:
APPLY LIME AND FERTILIZE ACCORDING TO SOIL TEST, OR APPLY 4000 lb/ac GROUND AGRICULTURAL LIMESTONE AND 1200 lb/ac 10-10-10 FERTILIZER.

MULCH:
USE CHANNEL LINING MATERIAL TO COVER THE BOTTOM OF DITCHES. THE LINING SHOULD EXTEND ABOVE THE HIGHEST CALCULATED DEPTH OF FLOW. ON CHANNEL SIDE SLOPES ABOVE THE HEIGHT, AND IN DRAINAGES NOT REQUIRING TEMPORARY LININGS, APPLY 4000 lb/ac

MULCH AND ANCHORING MATERIALS MUST NOT BE ALLOWED TO WASH DOWN SLOPE WHERE THEY CAN CLOG DRAINAGE DEVICES.
GRAIN STRAW AND ANCHOR STRAW BY STAPLING NETTING OVER THE TOP.

MAINTENANCE:
INSPECT AND REPAIR MULCH FREQUENTLY. RE-FERTILIZE IN LATE WINTER ACCORDING TO SOIL TESTS OR APPLY 150 lb/ac 10-10-10 FERTILIZER (3 lb/1000 sq ft). MOW REGULARLY TO A HEIGHT OF 2" TO 4".

PREPARED BY:
INTERFACE ENVIRONMENTAL CONSULTING, LLC
476 HIDDEN POND ROAD
BOONE, NC 28607
919-656-4543
IEC

REVISIONS | DATE

PREPARED FOR: BLUE RIDGE CONSERVANCY

BOONE GORGE PARK
ESC DETAILS
MIDDLE FORK GREENWAY
WATAUGA COUNTY, NC

SHEET X4.6

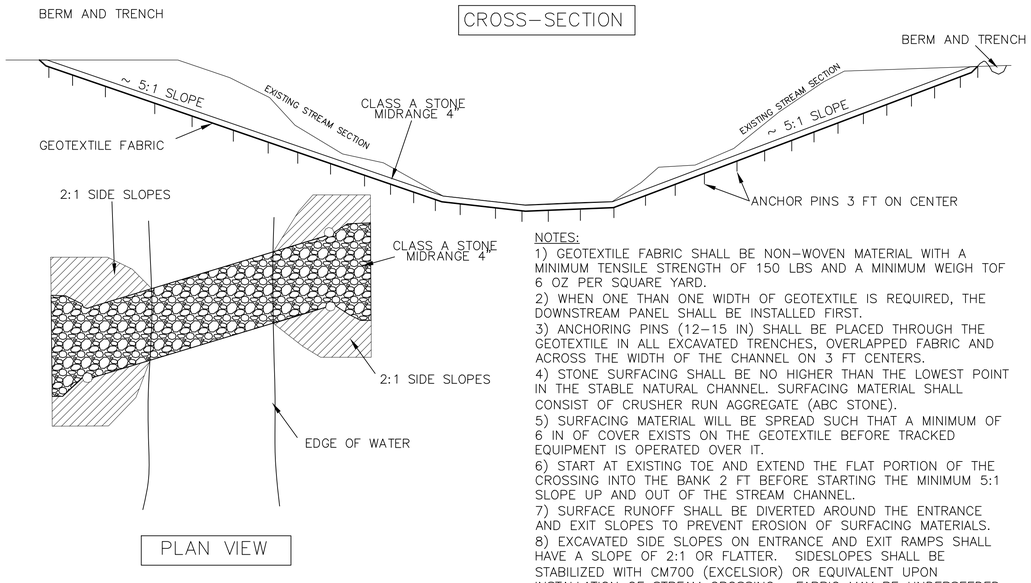

NOTES:

1) GEOTEXTILE FABRIC SHALL BE NON-WOVEN MATERIAL WITH A MINIMUM TENSILE STRENGTH OF 150 LBS AND A MINIMUM WEIGH TOF 6 OZ PER SQUARE YARD.
2) WHEN ONE THAN ONE WIDTH OF GEOTEXTILE IS REQUIRED, THE DOWNSTREAM PANEL SHALL BE INSTALLED FIRST.
3) ANCHORING PINS (12-15 IN) SHALL BE PLACED THROUGH THE GEOTEXTILE IN ALL EXCAVATED TRENCHES, OVERLAPPED FABRIC AND ACROSS THE WIDTH OF THE CHANNEL ON 3 FT CENTERS.
4) STONE SURFACING SHALL BE NO HIGHER THAN THE LOWEST POINT IN THE STABLE NATURAL CHANNEL. SURFACING MATERIAL SHALL CONSIST OF CRUSHER RUN AGGREGATE (ABC STONE).
5) SURFACING MATERIAL WILL BE SPREAD SUCH THAT A MINIMUM OF 6 IN OF COVER EXISTS ON THE GEOTEXTILE BEFORE TRACKED EQUIPMENT IS OPERATED OVER IT.
6) START AT EXISTING TOE AND EXTEND THE FLAT PORTION OF THE CROSSING INTO THE BANK 2 FT BEFORE STARTING THE MINIMUM 5:1 SLOPE UP AND OUT OF THE STREAM CHANNEL.
7) SURFACE RUNOFF SHALL BE DIVERTED AROUND THE ENTRANCE AND EXIT SLOPES TO PREVENT EROSION OF SURFACING MATERIALS.
8) EXCAVATED SIDE SLOPES ON ENTRANCE AND EXIT RAMPS SHALL HAVE A SLOPE OF 2:1 OR FLATTER. SIDESLOPES SHALL BE STABILIZED WITH CM700 (EXCELSIOR) OR EQUIVALENT UPON INSTALLATION OF STREAM CROSSING. FABRIC MAY BE UNDERSEEDED IF PERMANENT GRASS COVER IS PREFERRED, OR REMOVED AND STREAMSIDE VEGETATION RESTORED AFTER REMOVAL OF THE STREAM CROSSING.
9) IN STREAM FLOOR WHERE COURSE ROCK AND/OR GRAVEL EXIST, NO CRUSHER RUN AGGREGATE WILL BE USED TO LINE LOW FLOW CHANNEL BOTTOM.

TEMPORARY STREAM CROSSING (FORD) INSTALLATION DETAIL

TRAIL BOULDER RETAINING WALL DETAIL (UPPER AND LOWER)

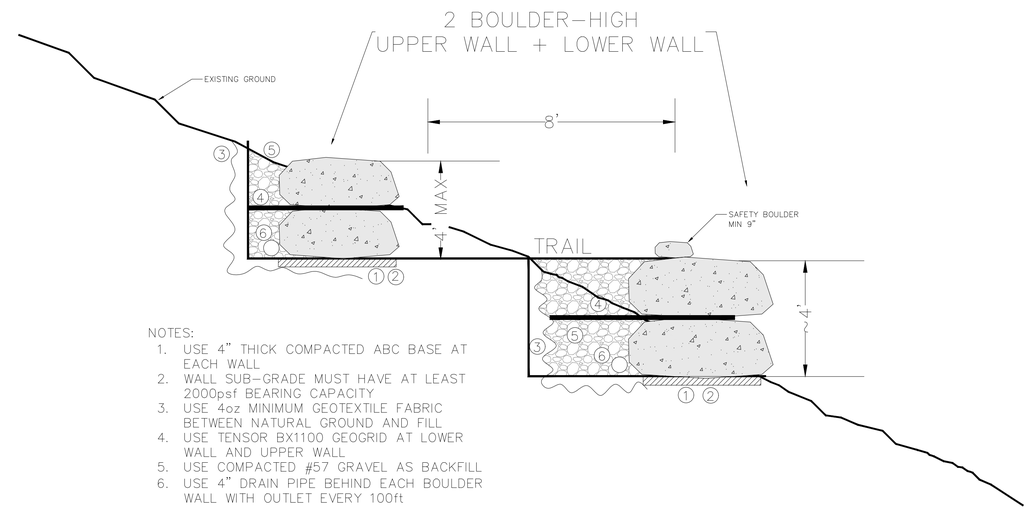

NOTES:

1. USE 4" THICK COMPACTED ABC BASE AT EACH WALL
2. WALL SUB-GRADE MUST HAVE AT LEAST 2000psf BEARING CAPACITY
3. USE 4oz MINIMUM GEOTEXTILE FABRIC BETWEEN NATURAL GROUND AND FILL
4. USE TENSOR BX1100 GEOGRID AT LOWER WALL AND UPPER WALL
5. USE COMPACTED #57 GRAVEL AS BACKFILL
6. USE 4" DRAIN PIPE BEHIND EACH BOULDER WALL WITH OUTLET EVERY 100ft

PREPARED BY:
IEC
INTERFACE ENVIRONMENTAL CONSULTING, LLC
476 HIDDEN POND ROAD
BOONE, NC 28607
919-656-4543

REVISIONS	DATE

PREPARED FOR: BLUE RIDGE CONSERVANCY

BOONE GORGE TRAIL

ESC DETAILS AND CALCULATIONS

MIDDLE FORK GREENWAY - BOONE GORGE
WATAUGA COUNTY, NC

SHEET
X4.7

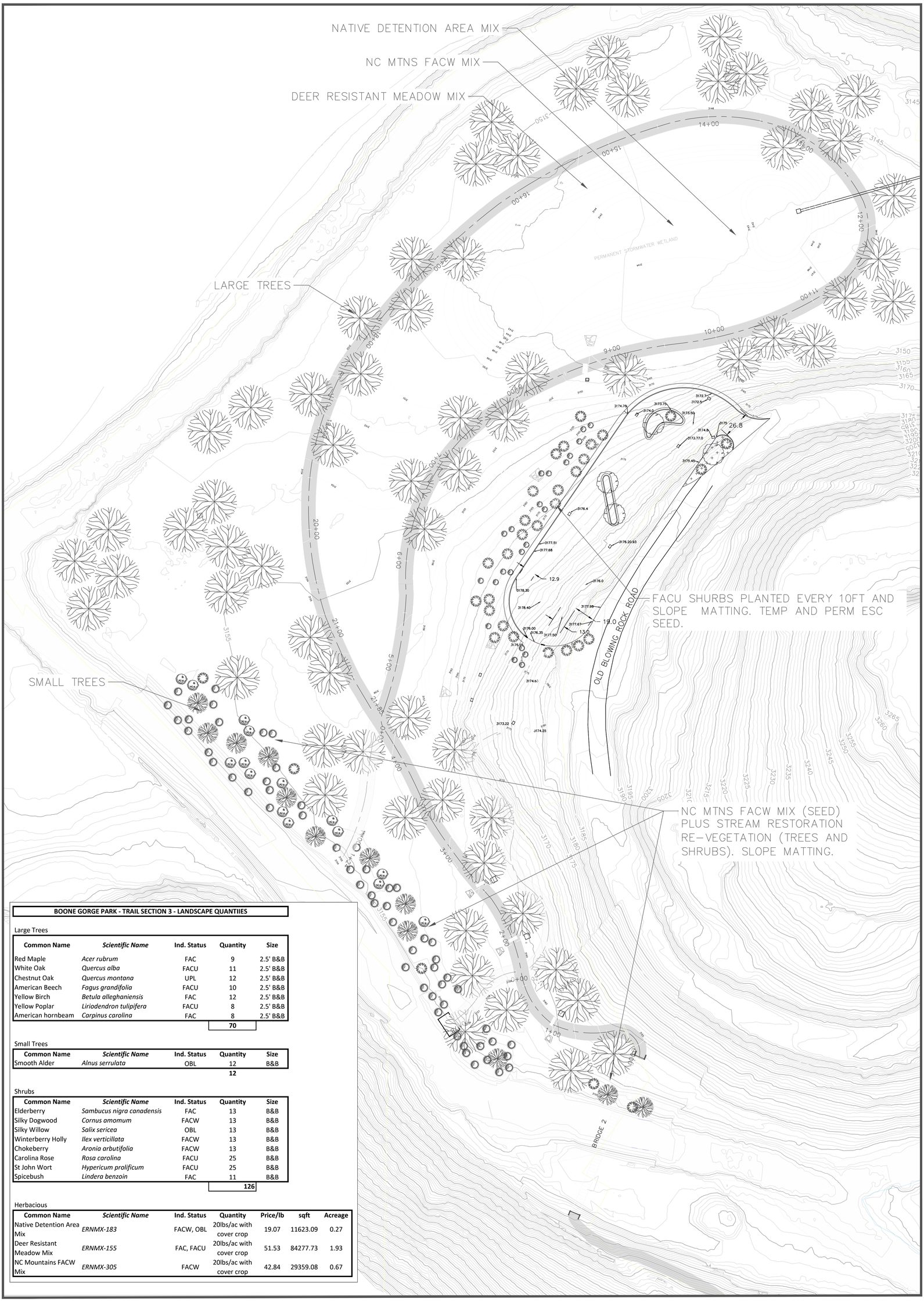

BOONE GORGE PARK - TRAIL SECTION 3 - LANDSCAPE QUANTIIES

Large Trees

Common Name	*Scientific Name*	Ind. Status	Quantity	Size
Red Maple	*Acer rubrum*	FAC	9	2.5' B&B
White Oak	*Quercus alba*	FACU	11	2.5' B&B
Chestnut Oak	*Quercus montana*	UPL	12	2.5' B&B
American Beech	*Fagus grandifolia*	FACU	10	2.5' B&B
Yellow Birch	*Betula alleghaniensis*	FAC	12	2.5' B&B
Yellow Poplar	*Liriodendron tulipifera*	FACU	8	2.5' B&B
American hornbeam	*Carpinus carolina*	FAC	8	2.5' B&B
			70	

Small Trees

Common Name	*Scientific Name*	Ind. Status	Quantity	Size
Smooth Alder	*Alnus serrulata*	OBL	12	B&B
			12	

Shrubs

Common Name	*Scientific Name*	Ind. Status	Quantity	Size
Elderberry	*Sambucus nigra canadensis*	FAC	13	B&B
Silky Dogwood	*Cornus amomum*	FACW	13	B&B
Silky Willow	*Salix sericea*	OBL	13	B&B
Winterberry Holly	*Ilex verticillata*	FACW	13	B&B
Chokeberry	*Aronia arbutifolia*	FACW	13	B&B
Carolina Rose	*Rosa carolina*	FACU	25	B&B
St John Wort	*Hypericum prolificum*	FACU	25	B&B
Spicebush	*Lindera benzoin*	FAC	11	B&B
			126	

Herbacious

Common Name	*Scientific Name*	Ind. Status	Quantity	Price/lb	sqft	Acreage
Native Detention Area Mix	*ERNMX-183*	FACW, OBL	20lbs/ac with cover crop	19.07	11623.09	0.27
Deer Resistant Meadow Mix	*ERNMX-155*	FAC, FACU	20lbs/ac with cover crop	51.53	84277.73	1.93
NC Mountains FACW Mix	*ERNMX-305*	FACW	20lbs/ac with cover crop	42.84	29359.08	0.67

SHEET L1.0

N W E S

SCALE: 1"=40'

0 40 80 Feet

PREPARED FOR: BLUE RIDGE CONSERVANCY

BOONE GORGE PARK
TRAIL SECTION 3 – LANDSCAPE
MIDDLE FORK GREENWAY
WATAUGA COUNTY, NC

REVISIONS	DATE

NORTH CAROLINA PROFESSIONAL SEAL 42350 ENGINEER PATRICK WARREN 4/7/25

WARREN CONSULTING & DESIGN, PLLC
850 9th Ave NW HICKORY, NC P-1005

IEC

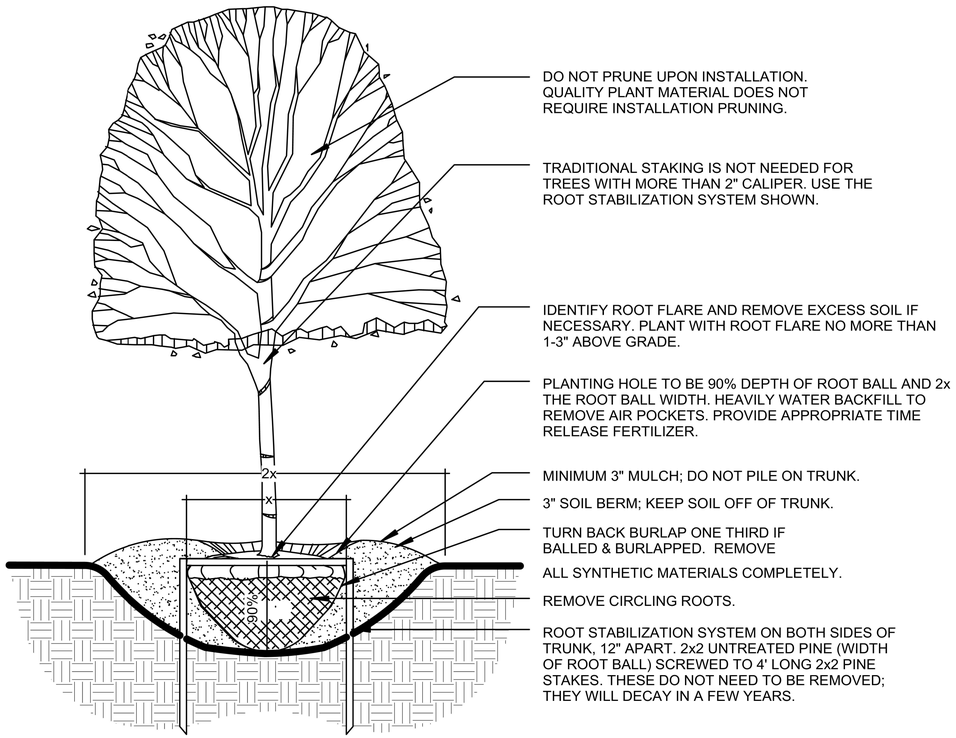

TREE PLANTING DETAIL

NOT TO SCALE

LANDSCAPE PLAN NOTES

1. ALL IMPROVEMENTS AND CONSTRUCTION SHALL BE IN ACCORDANCE WITH STATE AND LOCAL CODES AND REGULATIONS.
2. CONTRACTOR TO VERIFY ALL QUANTITIES. ALL PLANT MATERIAL MUST BE INSTALLED BY A NORTH CAROLINA LICENSED LANDSCAPE CONTRACTOR.
3. ALL PLANTS MUST MEET THE REQUIREMENTS OF THE MOST RECENT EDITION OF AMERICAN STANDARDS FOR NURSERY STOCK. PLANTS MUST BE HEALTHY, WELL BRANCHED, AND FREE OF DISEASE AND INSECT INFESTATION.
4. PLANT MATERIAL MAY BE SUBJECT TO SUBSTITUTIONS BASED ON CURRENT NURSERY AVAILABILITY. ALL SUBSTITUTIONS SHALL BE NATIVE RIPARIAN SPECIES OF SIMILAR GROWTH HABIT.
5. ALL UNDERGROUND UTILITIES SHALL BE FIELD LOCATED BY UTILITY COMPANIES PRIOR TO INSTALLING PLANT MATERIAL.
6. PERFORM EXCAVATION IN THE VICINITY OF UNDERGROUND UTILITIES WITH CARE AND IF NECESSARY, BY HAND.
7. TREES TO BE PLANTED A MINIMUM OF 10 FEET FROM WATER AND SEWER LINES AND A MINIMUM OF 15 FEET FROM ELECTRICAL AND GAS LINES.
8. IF ANY PART OF THIS PLAN CANNOT BE FOLLOWED DUE TO SITE CONDITIONS, CONTACT IEC PRIOR TO COMMENCING WORK.

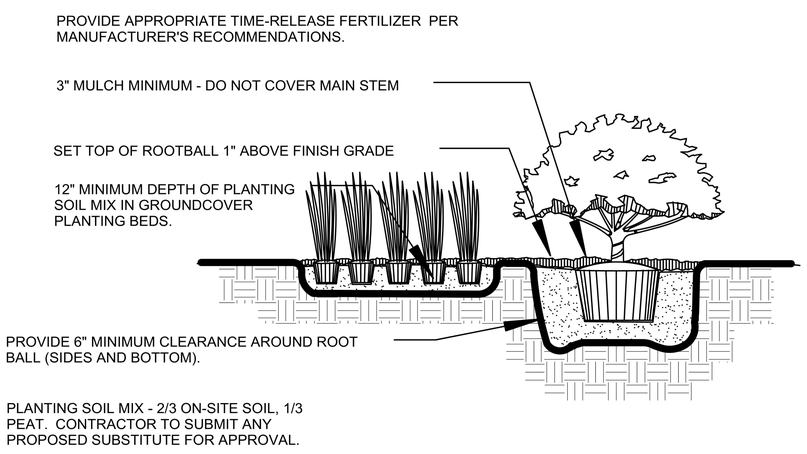

SHRUB/GROUND COVER PLANTING DETAIL

NOT TO SCALE

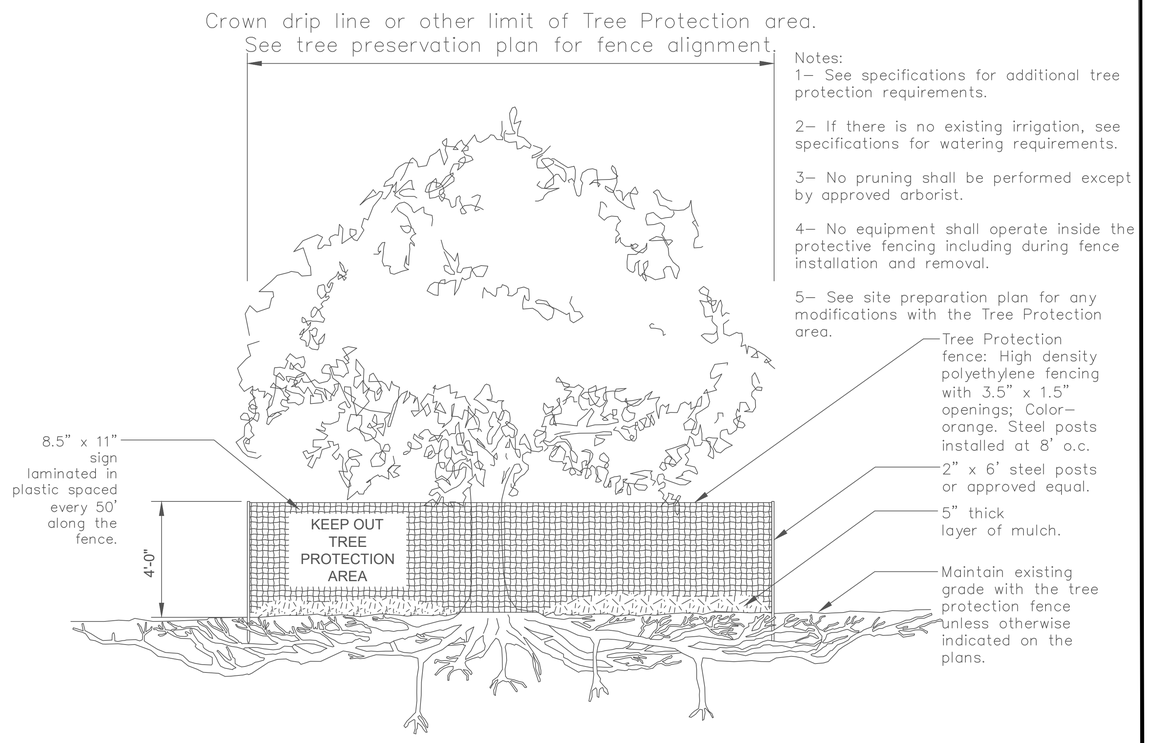

Notes:

1– See specifications for additional tree protection requirements.

2– If there is no existing irrigation, see specifications for watering requirements.

3– No pruning shall be performed except by approved arborist.

4– No equipment shall operate inside the protective fencing including during fence installation and removal.

5– See site preparation plan for any modifications with the Tree Protection area.

TREE PROTECTION DETAIL

NOT TO SCALE

IEC

WARREN CONSULTING & DESIGN, PLLC
850 9th Ave NW HICKORY, NC P-1005

NORTH CAROLINA REGISTERED LANDSCAPE ARCHITECT 3390 WARREN PATRICK 4/19/22

REVISIONS	DATE

PREPARED FOR: BLUE RIDGE CONSERVANCY

BOONE GORGE PARK
LANDSCAPE DETAILS
MIDDLE FORK GREENWAY
WATAUGA COUNTY, NC

SHEET
L1.1

ARETÉ ENGINEERS

MIDDLEFORK GREENWAY – BOONE GORGE PARK BOARDWALK

VICINITY MAP

ABBREVIATIONS	
A	AREA
AASHTO	AMERICAN ASSOCIATION OF STATE HIGHWAY AND TRANSPORTATION OFFICIALS
ADH.	ADHESIVE
AGG.	AGGREGATE
AISC	AMERICAN INSTITUTE OF STEEL CONSTRUCTION
ALT.	ALTERNATE
ANSI	AMERICAN NATIONAL STANDARDS INSTITUTE
APPRH.	APPROACH
APPROX.	APPROXIMATE
ASTM	AMERICAN SOCIETY FOR TESTING MATERIALS
BOT.	BOTTOM
BRG.	BEARING
CTS.	CENTERS
CIPL	CAST IN PLACE
C/L	CENTERLINE
CON.	CONNECTION
CONC.	CONCRETE
COORD.	COORDINATE
DGN.	DESIGN
DIM.	DIMENSION
DWG.	DRAWING
EA.	EACH
EL.	ELEVATION
ENGR.	ENGINEER
EXIST.	EXISTING
F TO F	FACE TO FACE
FDN.	FOUNDATION
FT.	FEET
GALV.	GALVANIZED
GR.	GRADE
HORIZ.	HORIZONTAL
IN.	INCH
LB.	POUND
LONG.	LONGITUDINAL
MAX.	MAXIMUM
MIN.	MINIMUM
O/C	ON CENTER
OD	OUTSIDE DIAMETER
PAR.	PARALLEL
PVC	POLYVINYL CHLORIDE
REINF.	REINFORCEMENT
SCH.	SCHEDULE
STD.	STANDARD
STL.	STEEL
STR.	STRUCTURE
W.W.F.	WELDED WIRE FABRIC

SHEET INDEX	
S1	COVER SHEET / STANDARD NOTES
S2	PLAN & ELEVATION
S3	CROSS SECTION / RAILING CONNECTIONS
S4	SUPERSTRUCTURE/SUBSTRUCTURE CONNECTIONS
S5	PIER & FOOTING DETAILS
S6	END BENT DETAILS
S7	OVERLOOK DETAILS

DESIGN DATA:

SPECIFICATIONS – – – – – – – – A.A.S.H.T.O. GUIDE SPECIFICATIONS FOR DESIGN OF FRP PEDESTRIAN BIRDGES, 2ND EDITION

A.A.S.H.T.O. LRFD BRIDGE DESIGN SPECIFICATIONS

LIVE LOAD ---------- 90 PSF
IMPACT ALLOWANCE ---------- SEE A.A.S.H.T.O.
STRESS IN EXTREME FIBER OF
STRUCTURAL STEEL – ASSHTO M270 GRADE 26 -------- 36,000 LBS. PER SQ. IN.
– AASHTO M270 GRADE 50W -------- 50,000 LBS. PER SQ. IN
– AASHTO M270 GRADE 50 -------- 50,000 LBS. PER SQ. IN.
REINFORCING STEEL IN TENSION – GRADE 60 ---------- 60,000 LBS. PER SQ. IN.
CONCRETE IN COMPRESSION ---------- 3,000 LBS. PER SQ. IN.
CONCRETE IN SHEAR ---------- SEE A.A.S.H.T.O.
STRUCTURAL TIMBER – TREATED OR UNTREATED ---------- 1,800 LBS. PER SQ. IN.
EXTREME FIBER STRESS
COMPRESSION PERPENDICULAR TO GRAIN OF ---------- 375 LBS. PER SQ. IN.
OF TIMBER
EQUIVALENT FLUID PRESSURE OF EARTH ---------- 60 LBS. PER CU. FT. (MIN.)

MATERIAL AND WORKMANSHIP:

EXCEPT AS MAY OTHERWISE BE SPECIFIED ON PLANS OR IN THE SPECIAL PROVISIONS. ALL MATERIAL AND WORKMANSHIP SHALL BE IN ACCORDANCE WITH THE 2018 "STANDARD SPECIFICATIONS FOR ROADS AND STRUCTURES" OF THE N.C. DEPARTMENT OF TRANSPORTATION.

CONCRETE:

UNLESS OTHERWISE REQUIRED ON PLANS, CLASS A CONCRETE SHALL BE USED FOR ALL PORTIONS OF ALL STRUCTURES WITH THE EXCEPTION THAT: CLASS AA CONCRETE SHALL BE USED IN BRIDGE SUPERSTRUCTURES, ABUTMENT BACKWALLS, AND APPROACH SLABS: AND CLASS B CONCRETE SHALL BE USED FOR SLOPE PROTECTION AND RIP RAP. CONCRETE SHALL BE CURED IN COMPLIANCE WITH NCDOT SPECIFICATIONS.

CONCRETE CHAMFERS:

UNLESS OTHERWISE NOTED ON THE PLANS, ALL EXPOSED CORNERS ON STRUCTURES SHALL BE CHAMFERED 3/4" WITH THE FOLLOWING EXCEPTIONS: TOP CORNERS OF CURBS MAY BE ROUNDED TO 1–1/2" RADIUS WHICH IS BUILT INTO CURB FORMS; CORNERS OF TRANSVERSE FLOOR EXPANSION JOINTS SHALL BE ROUNDED WITH A 1/4" FINISHING TOOL UNLESS OTHERWISE REQUIRED ON PLANS; AND CORNERS OF EXPANSION JOINTS IN THE ROADWAY FACES AND TOPS OF CURBS AND SIDEWALKS SHALL BE ROUNDED TO A 1/4" RADIUS WITH A FINISHING STONE OR TOOL UNLESS OTHERWISE REQUIRED ON PLANS.

DOWELS:

DOWELS, UNLESS OTHERWISE NOTES, SHALL BE EMBEDDED A MINIMUM OF 6" INTO EXISTING CONCRETE AND GROUTED INTO PLACE WITH 1:2 CEMENT MORTAR.

REINFORCING STEEL:

ALL REINFORCING STEEL SHALL BE DEFORMED. DIMENSIONS RELATIVE TO PLACEMENT OF REINFORCING ARE TO CENTERS OF BARS UNLESS OTHERWISE INDICATED IN THE PLANS. DIMENSIONS ON BAR DETAILS ARE TO CENTERS OF BARS OR ARE OUT TO OUT AS INDICATED ON PLANS.

WIRE BAR SUPPORTS SHALL BE PROVIDED FOR REINFORCING STEEL WHERE INDICATED ON THE PLANS. WHEN BAR SUPPORT PIECES ARE PLACE IN CONTINUOUS LINES, THEY SHALL BE SO PLACED THAT THE ENDS OF THE SUPPORTING WIRES SHALL BE LAPPED TO LOCK LEGS ON ADJOINING PIECES.

LAP SPLICES SHALL BE A MINIMUM LENGTH OF 40X DIAMETER OF BAR.

ALLOWANCE FOR DEAD LOAD DEFLECTION, SETTLEMENT, ETC. IN CASTING SUPERSTRUCTURES:

BRIDGES SHALL BE BUILT ON THE GRADE OR VERTICAL CURVE SHOWN ON PLANS. SLABS,CURBS, AND PARAPETS SHALL CONFORM TO THE GRADE OR CURVE.

ALL DIMENSIONS WHICH ARE GIVEN IN SECTION AND ARE AFFECTED BY DEAD LOAD DEFLECTIONS ARE DIMENSIONS AT CENTER LINE OF BEARING UNLESS OTHERWISE NOTED ON THE PLANS. IN SETTING FORMS FOR STEEL BEAM BRIDGES AND PRESTRESSED CONCRETE GIRDER BRIDGES, ADJUSTMENTS SHALL BE MADE DUE TO THE DEAD LOAD DEFLECTIONS FOR THE ELEVATIONS SHOWN. WHERE BLOCKS ARE SHOWN OVER BEAMS FOR BUILDING UP TO THE SLAB, THE VERTICAL DIMENSIONS OF THE BLOCKS SHALL BE ADJUSTED BETWEEN BEARING TO COMPENSATE FOR DEAD LOAD DEFLECTIONS, VERTICAL CURVE ORDINATE, AND ACTUAL BEAM CHAMBER. WHERE BOTTOM OF SLAB IS IN LINE WITH BOTTOM OF TOP FLANGES, DEPTH OF SLAB BETWEEN BEARINGS SHALL BE ADJUSTED TO COMPENSATE FOR DEAD LOAD DEFLECTION, VERTICAL CURVE ORDINATE, AND ACTUAL BEAM CHAMBER.

IN SETTING FALSEWORK AND FORMS FOR REINFORCED CONCRETE SPANS, AN ALLOWANCE SHALL BE MADE FOR DEAD LOAD DEFLECTIONS, SETTLEMENT OF FALSEWORK, AND PERMANENT CHAMBER WHICH SHALL BE PROVIDED FOR IN ADDITION TO THE ELEVATIONS SHOWN. AFTER REMOVAL OF THE FALSEWORK, THE FINISHED STRUCTURES SHALL CONFORM TO THE PROFILE AND ELEVATIONS SHOWN ON THE PLANS AND CONSTRUCTION ELEVATIONS FURNISHED BY THE ENGINEER.

DETAILED DRAWINGS FOR FALSEWORK OR FORMS FOR BRIDGE SUPERSTRUCTURE AND ANY STRUCTURE OR PARTS OF A STRUCTURE AS NOTED ON THE PLANS SHALL BE SUBMITTED TO THE ENGINEER FOR APPROVAL BEFORE CONSTRUCTION OF THE FALSEWORK OR FORMS IS STARTED.

SPECIAL NOTES:

GENERALLY, IN CASE OF DISCREPANCY, THIS STANDARD SHEET OF NOTES SHALL GOVERN OVER THE SPECIFICATIONS, BUT THE REMAINDER OF THE PLANS SHALL GOVERN OVER NOTES HEREON, AND SPECIAL PROVISIONS SHALL GOVERN OVER ALL.

CONSTRUCTION SEQUENCE:

PLACE BACKFILL IN ACCORDANCE WITH NCDOT SPECIFICATIONS. PLACE BACKFILL ABOVE THE BEARING SEAT AFTER THE PREFABRICATED FRP BRIDGE IS SET ON THE END BENTS.

NORTH CAROLINA PROFESSIONAL SEAL 057706 ENGINEER WILL HOLLIFIELD

04/02.25

ARETE ENGINEERS, PLLC
7668 Valley Blvd.
P.O. Box 745
Blowing Rock, NC 28605
FIRM LICENSE No. P–1357

ARETE JOB #4026

COVER SHEET / STANDARD NOTES

BOONE GORGES TRAIL BOARDWALK

MIDDLE FORK GREENWAY
DOWNSTREAM OF PAYNE BRANCH RD.

REVISIONS						SHEET NO.
NO.	BY.	DATE:	NO.	BY.	DATE:	S1
1			2			TOTAL SHEETS
3			4			7

DESIGNED:	WILLIAM M. HOLLIFIELD
DRAWN:	WILLIAM M. HOLLIFIELD
CHECKED:	ADAM G. FELMLEE
ENGINEER OF RECORD:	WILLIAM M. HOLLIFIELD

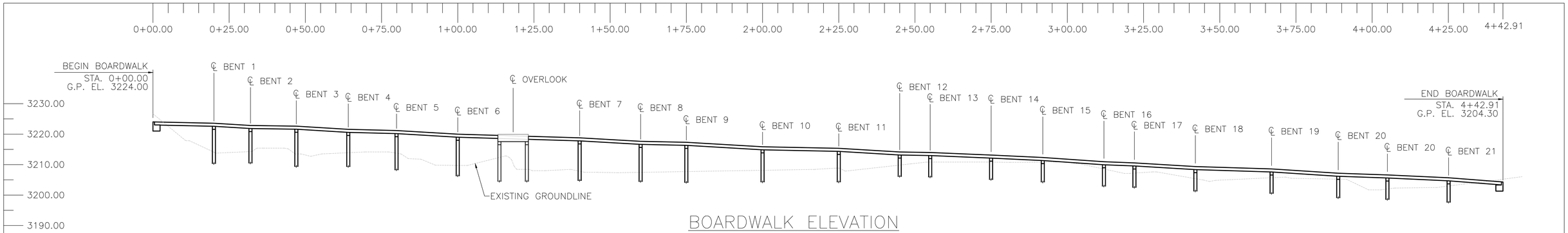

BOARDWALK ELEVATION

GRADE POINT STATIONS/ELEVATIONS FOR BENTS ARE SHOWN IN TABLE BELOW

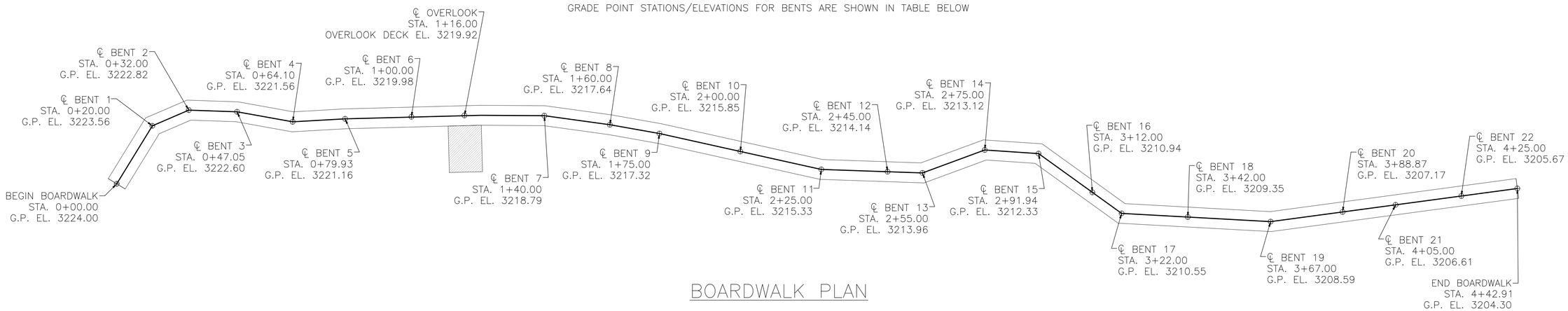

BOARDWALK PLAN

STATIONS/ELEVATIONS LAYOUT

SUBSTRUCTURE ELEMENT	SURVEY STATION	G.P. ELEVATION	TOP OF CAP ELEVATION
START BOARDWALK	0+00.00	3224.00	–
BENT 1	0+20.00	3223.56	3222.50
BENT 2	0+32.00	3222.82	3221.76
BENT 3	0+47.05	3222.60	3221.54
BENT 4	0+64.10	3221.56	3220.50
BENT 5	0+79.93	3221.16	3220.10
BENT 6	1+00.00	3219.98	3218.45
OVERLOOK BENT	1+16.00	3219.92	3218.86
BENT 7	1+40.00	3218.79	3217.26
BENT 8	1+60.00	3217.64	3216.58
BENT 9	1+75.00	3217.32	3216.03
BENT 10	2+00.00	3215.85	3214.56
BENT 11	2+25.00	3215.33	3214.04
BENT 12	2+45.00	3214.14	3213.08
BENT 13	2+55.00	3213.96	3212.90
BENT 14	2+75.00	3213.12	3212.06
BENT 15	2+91.94	3212.33	3211.26
BENT 16	3+12.00	3210.94	3209.87
BENT 17	3+22.00	3210.55	3209.48
BENT 18	3+42.00	3209.35	3208.06
BENT 19	3+67.00	3208.59	3207.30
BENT 20	3+88.87	3207.17	3206.10
BENT 21	4+05.00	3206.61	3205.54
BENT 22	4+25.00	3205.67	3204.60
END BOARDWALK	4+42.91	3204.30	–

SPAN LAYOUT

SPAN	LENGTH	CROSS SECTION REFERENCE
1	20.00	2
2	12.00	1
3	15.05	2
4	17.05	2
5	15.83	2
6	20.07	2
7	40.00	4
8	20.00	2
9	15.00	2
10	25.00	3
11	25.00	3
12	20.00	2
13	10.00	1
14	20.00	2
15	16.94	2
16	20.06	2
17	10.00	1
18	20.00	2
19	25.00	3
20	21.87	2
21	16.13	2
22	20.00	2
23	17.91	2

SEE S3 CROSS SECTIONS, REFERENCE NUMBER LOCATED BELOW DETAIL

NORTH CAROLINA PROFESSIONAL SEAL 057706 ENGINEER WILL HOLLIFIELD

04/02.25

ARETE ENGINEERS, PLLC
7668 Valley Blvd.
P.O. Box 745
Blowing Rock, NC 28605
FIRM LICENSE No. P-1357

ARETE JOB #4026

PLAN & ELEVATION

BOONE GORGES TRAIL BOARDWALK

MIDDLE FORK GREENWAY
DOWNSTREAM OF PAYNE BRANCH RD.

REVISIONS						SHEET NO.
NO.	BY.	DATE:	NO.	BY.	DATE:	S2
1			2			TOTAL SHEETS
3			4			7

DESIGNED:	WILLIAM M. HOLLIFIELD
DRAWN:	WILLIAM M. HOLLIFIELD
CHECKED:	ADAM G. FELMLEE
ENGINEER OF RECORD:	WILLIAM M. HOLLIFIELD

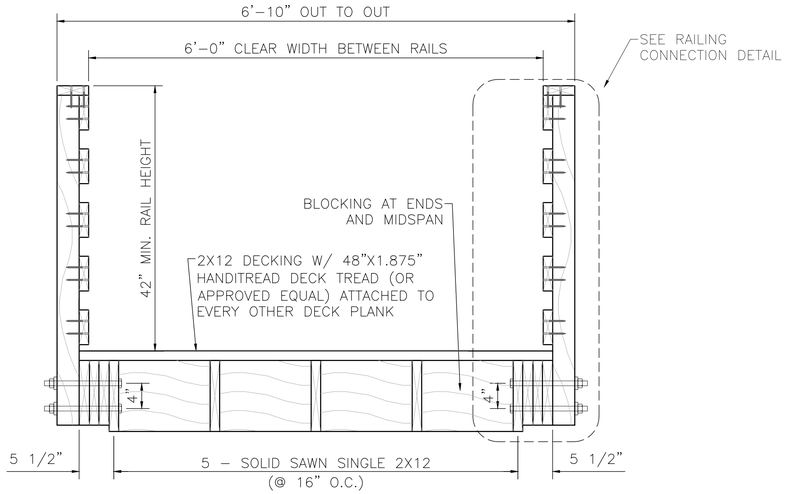

TYPICAL SECTION (SPAN LENGTHS 10'-0" - 12'-0")
[1]

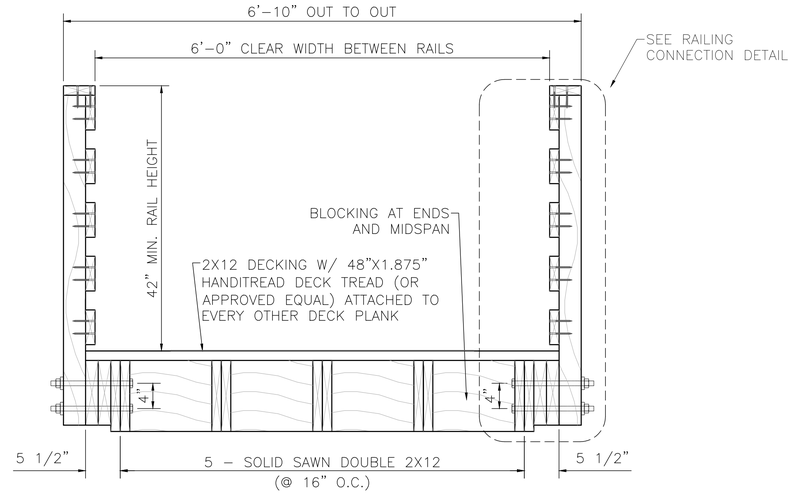

TYPICAL SECTION (SPAN LENGTHS 15'-0" - 21'-11")
[2]

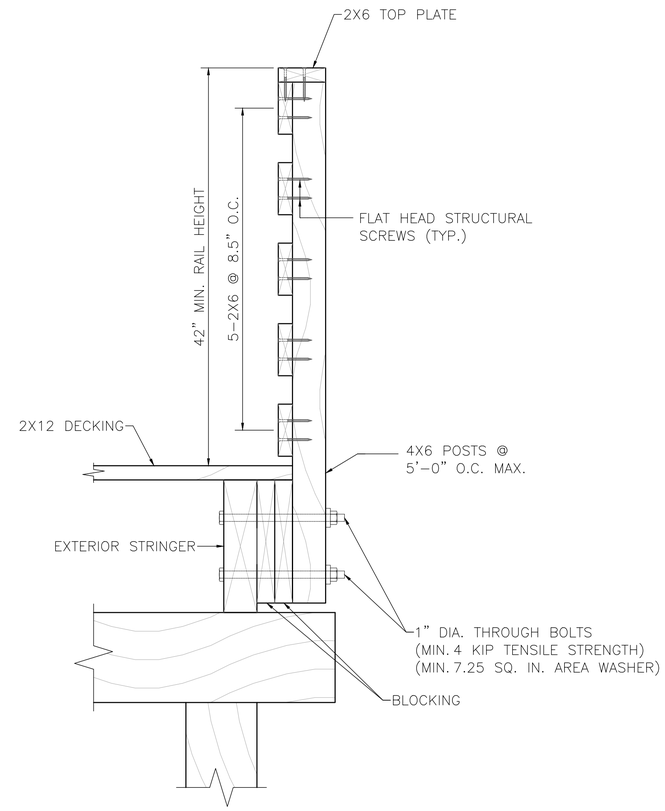

RAILING CONNECTION DETAIL

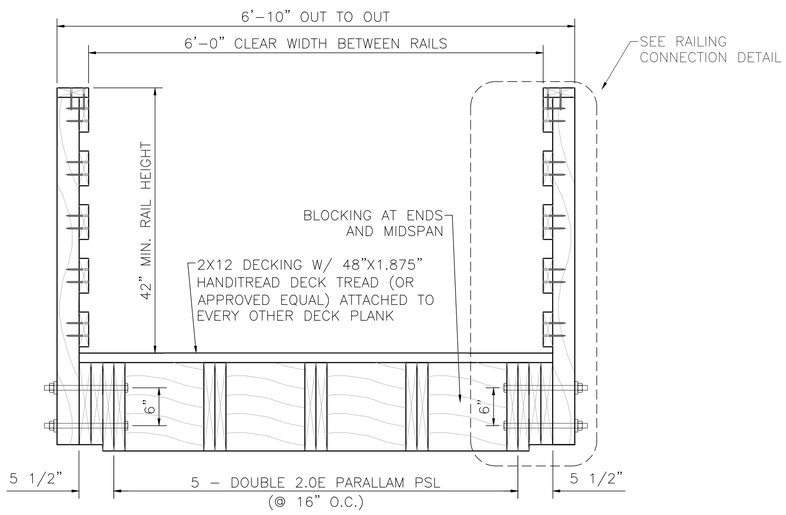

TYPICAL SECTION (SPAN LENGTH = 25'-0")
[3]

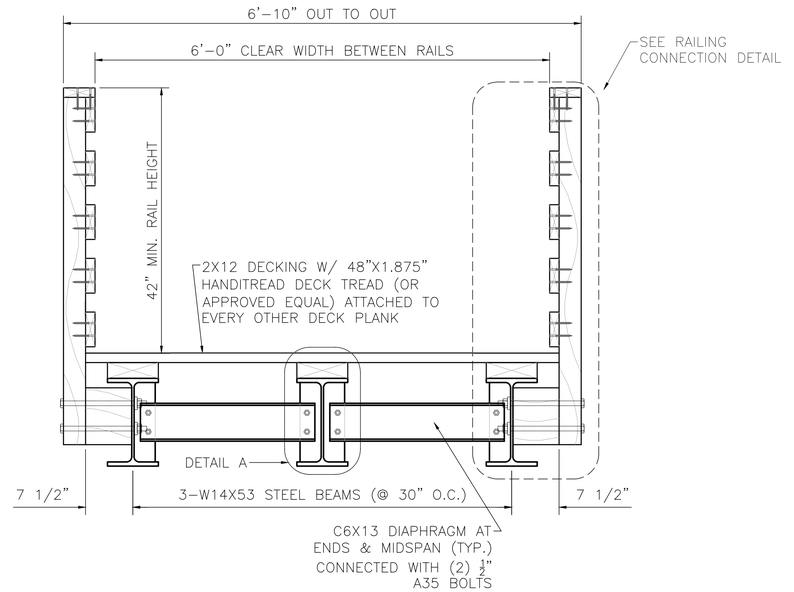

TYPICAL SECTION (SPAN LENGTH = 40'-0")

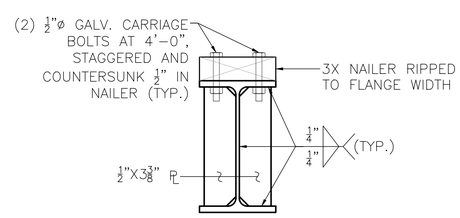

DETAIL A

DESIGNED:	WILLIAM M. HOLLIFIELD
DRAWN:	WILLIAM M. HOLLIFIELD
CHECKED:	ADAM G. FELMLEE
ENGINEER OF RECORD:	WILLIAM M. HOLLIFIELD

NORTH CAROLINA PROFESSIONAL SEAL 057706 ENGINEER WILL HOLLIFIELD

04/02.25

Areté ENGINEERS

ARETE ENGINEERS, PLLC
7668 Valley Blvd.
P.O. Box 745
Blowing Rock, NC 28605
FIRM LICENSE No. P-1357

ARETE JOB #4026

CROSS SECTIONS / RAILING CONNECTIONS

BOONE GORGES TRAIL BOARDWALK

MIDDLE FORK GREENWAY
DOWNSTREAM OF PAYNE BRANCH RD.

REVISIONS						SHEET NO.
NO.	BY.	DATE:	NO.	BY.	DATE:	S3
1			2			TOTAL SHEETS
3			4			7

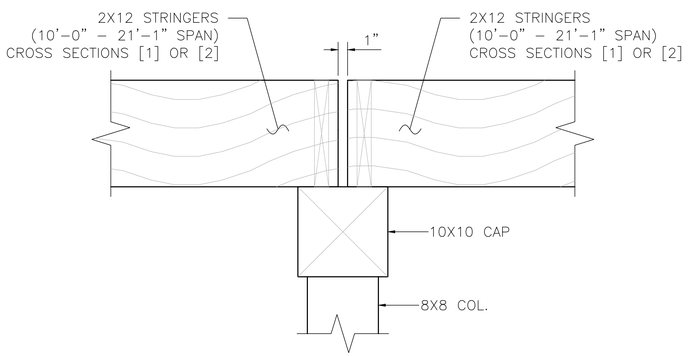

BENT TYPE A

[1] & [1] OR [1] & [2] SUPERSTRUCTURES (SEE S3 FOR REF.)
MIRROR ACCORDING TO SPAN LAYOUT

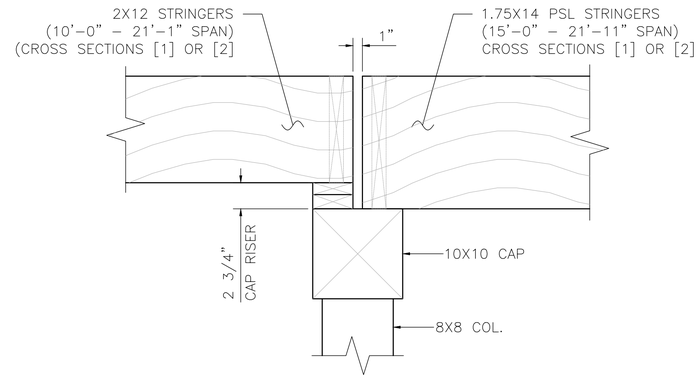

BENT TYPE B

[2] & [3] SUPERSTRUCTURES (SEE S3 FOR REF.)
MIRROR ACCORDING TO SPAN LAYOUT

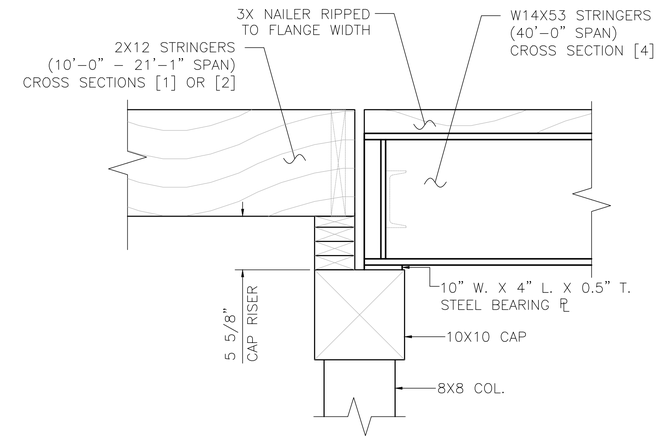

BENT TYPE C

[2] & [4] SUPERSTRUCTURES (SEE S3 FOR REF.)
MIRROR ACCORDING TO SPAN LAYOUT

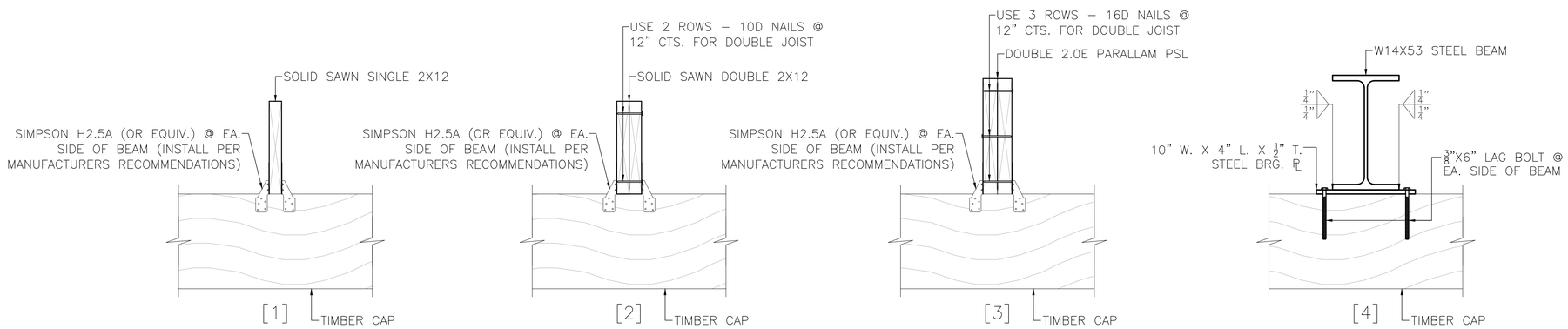

TYPICAL STRINGER TO CAP CONNECTION (SEE [*] FOR SUPERSTRUCTURE TYPE)

DESIGNED:	WILLIAM M. HOLLIFIELD
DRAWN:	WILLIAM M. HOLLIFIELD
CHECKED:	ADAM G. FELMLEE
ENGINEER OF RECORD:	WILLIAM M. HOLLIFIELD

NORTH CAROLINA PROFESSIONAL SEAL 057706 ENGINEER WILL HOLLIFIELD

04/02.25

Areté ENGINEERS

ARETE ENGINEERS, PLLC
7668 Valley Blvd.
P.O. Box 745
Blowing Rock, NC 28605
FIRM LICENSE No. P-1357

ARETE JOB #4026

SUPERSTRUCTURE / SUBSTRUCTURE CONNECTION DETAILS

BOONE GORGES TRAIL BOARDWALK

MIDDLE FORK GREENWAY
DOWNSTREAM OF PAYNE BRANCH RD.

REVISIONS

NO.	BY.	DATE:	NO.	BY.	DATE:
1			2		
3			4		

SHEET NO. S4

TOTAL SHEETS 7

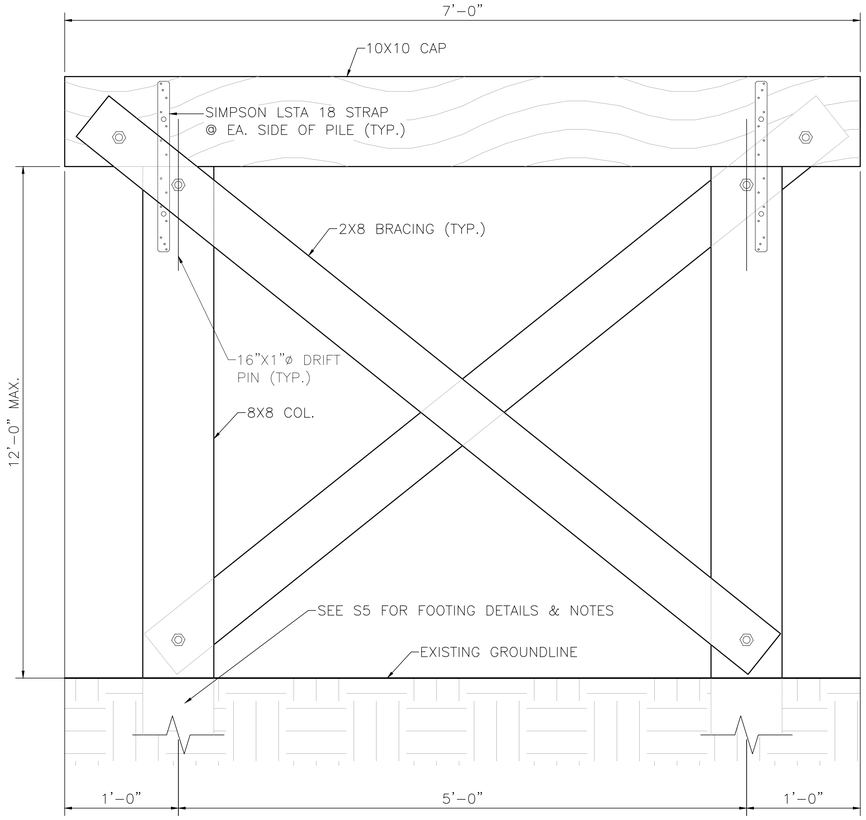

BENTS 1-5, BENTS 8-22 (TYP.)

NOTE: X-BRACING ONLY REQUIRED FOR BENTS WHERE EXISTING GROUND AND BOTTOM OF CAP EXCEEDS DISTANCE OF 5'-0".

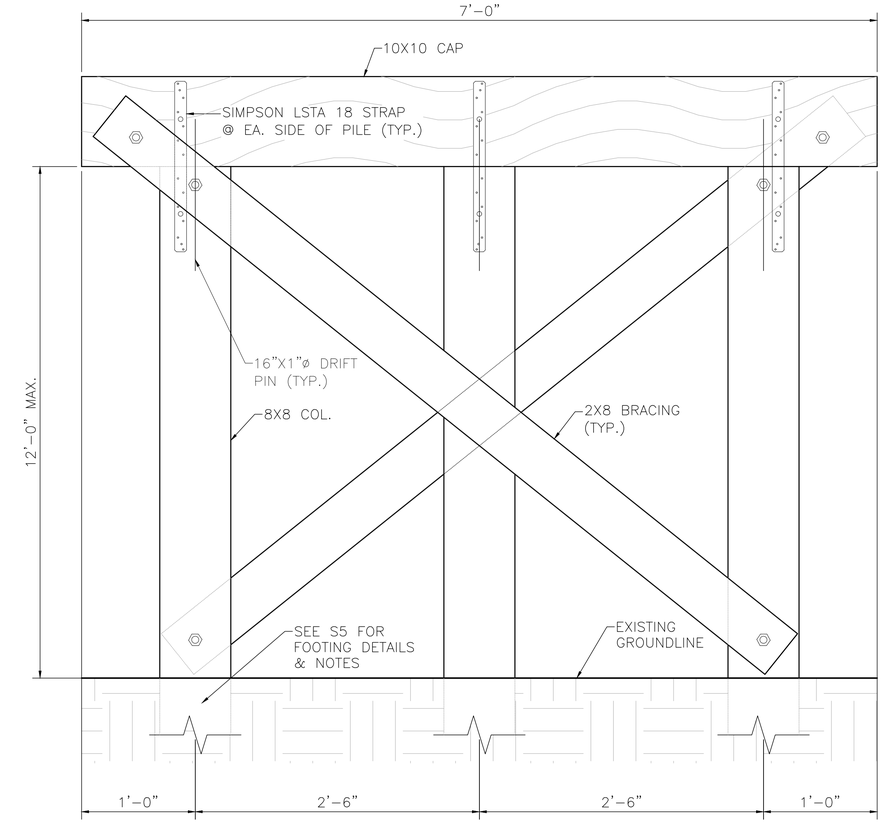

BENTS 6 & 7 (40' SPAN)

NOTE: FOUNDATION TYPE TO BE DETERMINED BY GEOTECHNICAL ENGINEER AT EACH PIER LOCATION. FOOTINGS ON SOIL ASSUMED WITH AN ALLOWABLE BEARING CAPACITY OF 3000 PSF. FOOTINGS ON ROCK ASSUMED WITH AN ALLOWABLE BEARING CAPACITY OF 6000. GEOTECHNICAL ENGINEER TO VERIFY THESE VALUES.

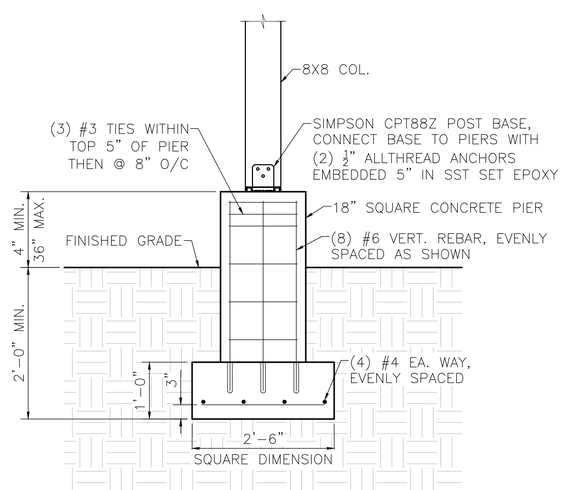

CASE 1: FOOTING ON SOIL
(ALLOWABLE BEARING CAPACITY = 3000PSF)

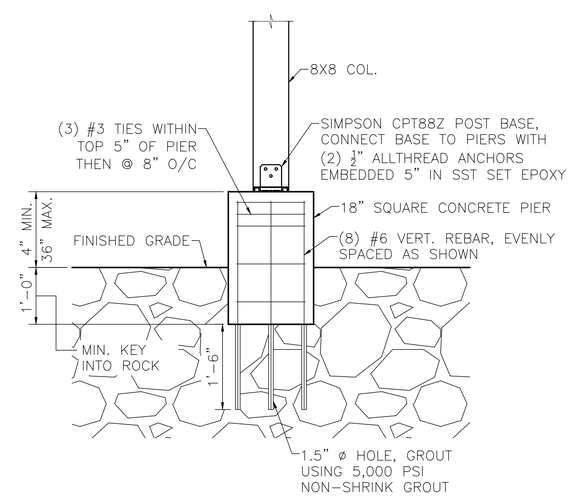

CASE 2: FOOTING ON ROCK
(ALLOWABLE BEARING CAPACITY = 6000PSF)

DESIGNED:	WILLIAM M. HOLLIFIELD
DRAWN:	WILLIAM M. HOLLIFIELD
CHECKED:	ADAM G. FELMLEE
ENGINEER OF RECORD:	WILLIAM M. HOLLIFIELD

NORTH CAROLINA PROFESSIONAL SEAL 057706 ENGINEER WILL HOLLIFIELD

04/02.25

Areté ENGINEERS
ARETE ENGINEERS, PLLC
7668 Valley Blvd.
P.O. Box 745
Blowing Rock, NC 28605
FIRM LICENSE No. P-1357

ARETE JOB #4026

PIER & FOOTING DETAILS

BOONE GORGES TRAIL BOARDWALK

MIDDLE FORK GREENWAY
DOWNSTREAM OF PAYNE BRANCH RD.

REVISIONS						SHEET NO.
NO.	BY.	DATE:	NO.	BY.	DATE:	S5
1			2			TOTAL SHEETS
3			4			7

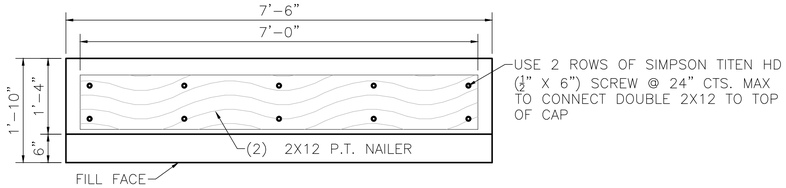

PLAN VIEW

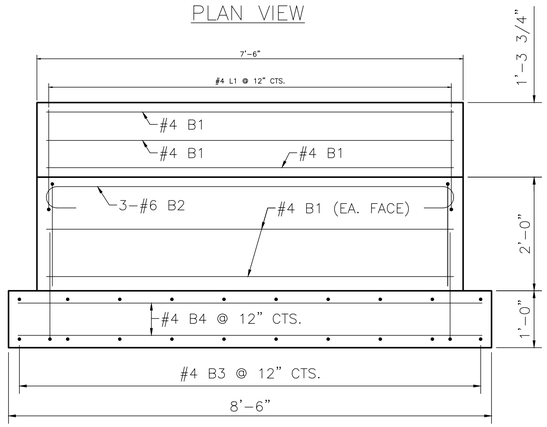

ELEVATION VIEW

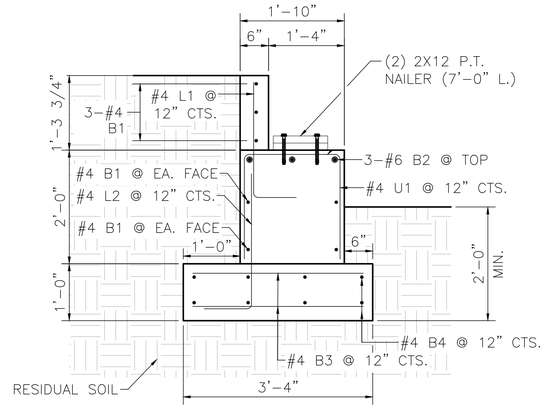

SECTION VIEW

CASE 1: END BENT ON SOIL (ALLOWABLE BEARING CAPACITY = 3000 PSF)

BILL OF MATERIAL (CASE 1: SOIL)

BAR	NO.	SIZE	TYPE	LENGTH	WEIGHT
B1	7	#4	STR	7'-2"	34
B2	3	#6	1	8'-4"	38
B3	9	#4	STR	3'-0"	18
B4	8	#4	STR	8'-2"	44
L1	8	#4	2	2'-10"	15
L2	8	#4	3	3'-2"	17
	8				
U1	8	#4	4	5'-4"	29
REINFORCING STEEL (FOR END BENT)					193 LBS.
TOTAL CLASS A CONCRETE					2.25 CU. YD.

BAR TYPES

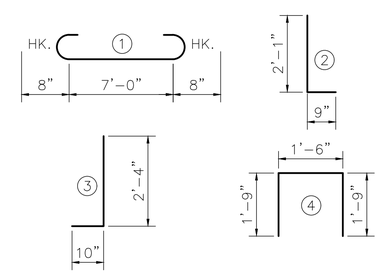

NOTE: FOUNDATION TYPE TO BE DETERMINED BY GEOTECHNICAL ENGINEER AT EACH END BENT LOCATION. FOOTINGS ON SOIL ASSUMED WITH AN ALLOWABLE BEARING CAPACITY OF 3000 PSF. FOOTINGS ON ROCK ASSUMED WITH AN ALLOWABLE BEARING CAPACITY OF 6000. GEOTECHNICAL ENGINEER TO VERIFY THESE VALUES.

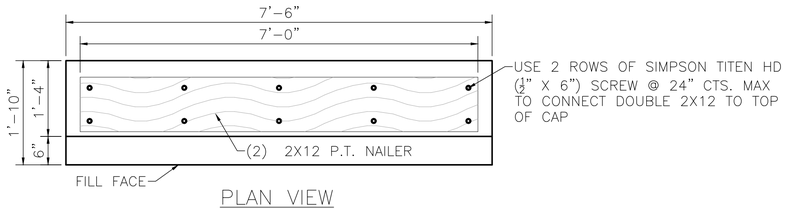

PLAN VIEW

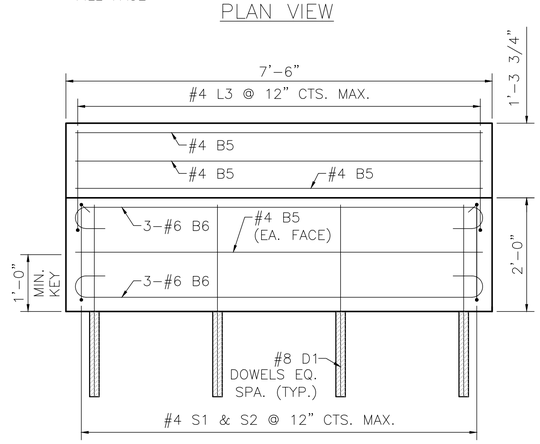

ELEVATION VIEW

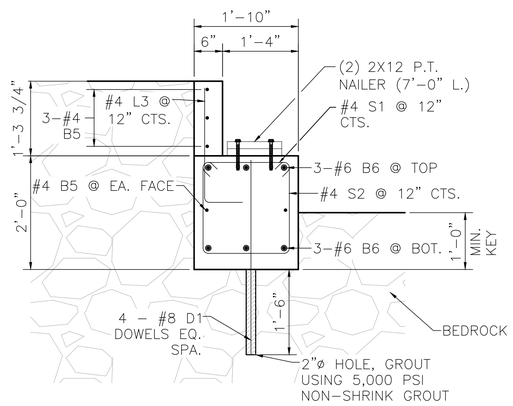

SECTION VIEW

CASE 2: END BENT ON ROCK (ALLOWABLE BEARING CAPACITY = 6000 PSF)

BILL OF MATERIAL (CASE 2: ROCK)

BAR	NO.	SIZE	TYPE	LENGTH	WEIGHT
B5	5	#4	STR	7'-2"	24
B6	6	#6	5	8'-4"	75
D1	4	#4	STR	4'-3"	12
L1	8	#4	6	2'-10"	15
S1	8	#4	7	2'-3"	12
S2	8	#4	4	5'-5"	29
REINFORCING STEEL (FOR END BENT)					167 LBS.
TOTAL CLASS A CONCRETE					1.20 CU. YD.

BAR TYPES

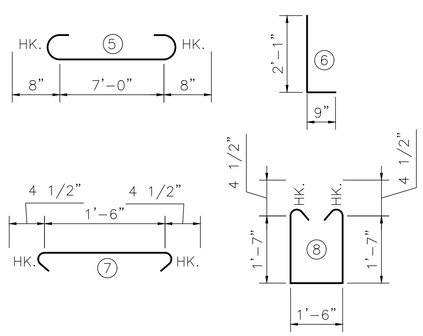

DESIGNED:	WILLIAM M. HOLLIFIELD
DRAWN:	WILLIAM M. HOLLIFIELD
CHECKED:	ADAM G. FELMLEE
ENGINEER OF RECORD:	WILLIAM M. HOLLIFIELD

NORTH CAROLINA PROFESSIONAL SEAL 057706 ENGINEER WILL HOLLIFIELD

04/02/25

Areté ENGINEERS

ARETE ENGINEERS, PLLC
7668 Valley Blvd.
P.O. Box 745
Blowing Rock, NC 28605
FIRM LICENSE No. P-1357

ARETE JOB #4026

END BENT DETAILS

BOONE GORGES TRAIL BOARDWALK

MIDDLE FORK GREENWAY
DOWNSTREAM OF PAYNE BRANCH RD.

REVISIONS								SHEET NO.
NO.	BY.	DATE:	NO.	BY.	DATE:			S6
1			2					TOTAL SHEETS
3			4					7

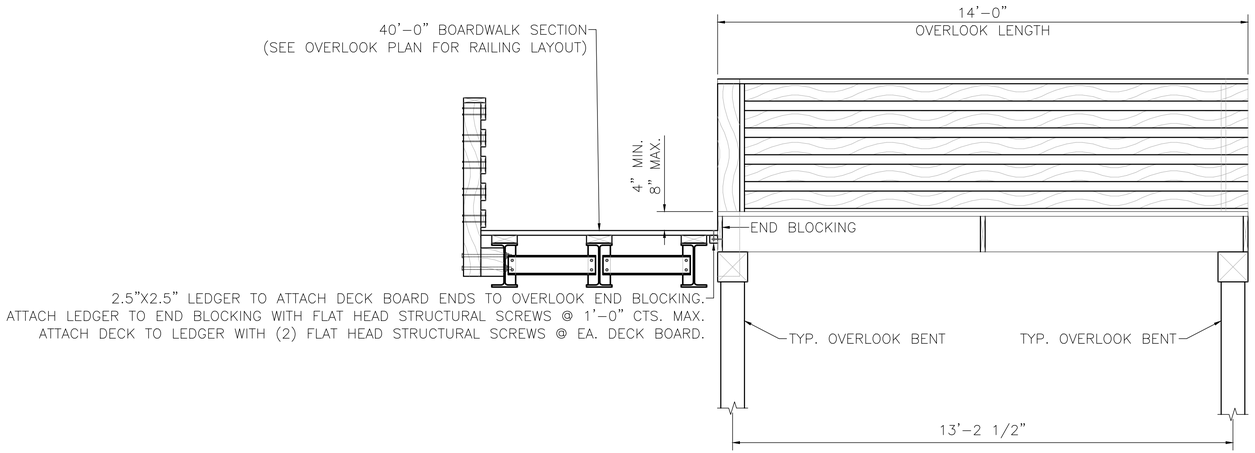

OVERLOOK ELEVATION

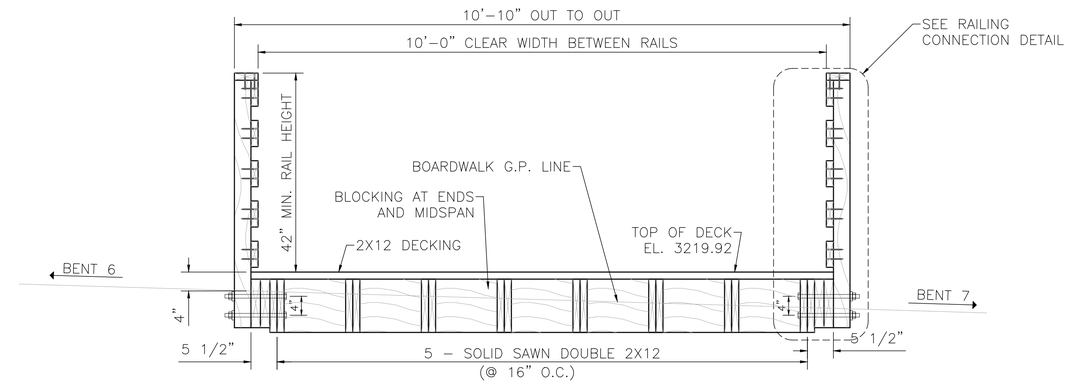

TYPICAL SECTION (OVERLOOK)
(SECTION A-A)

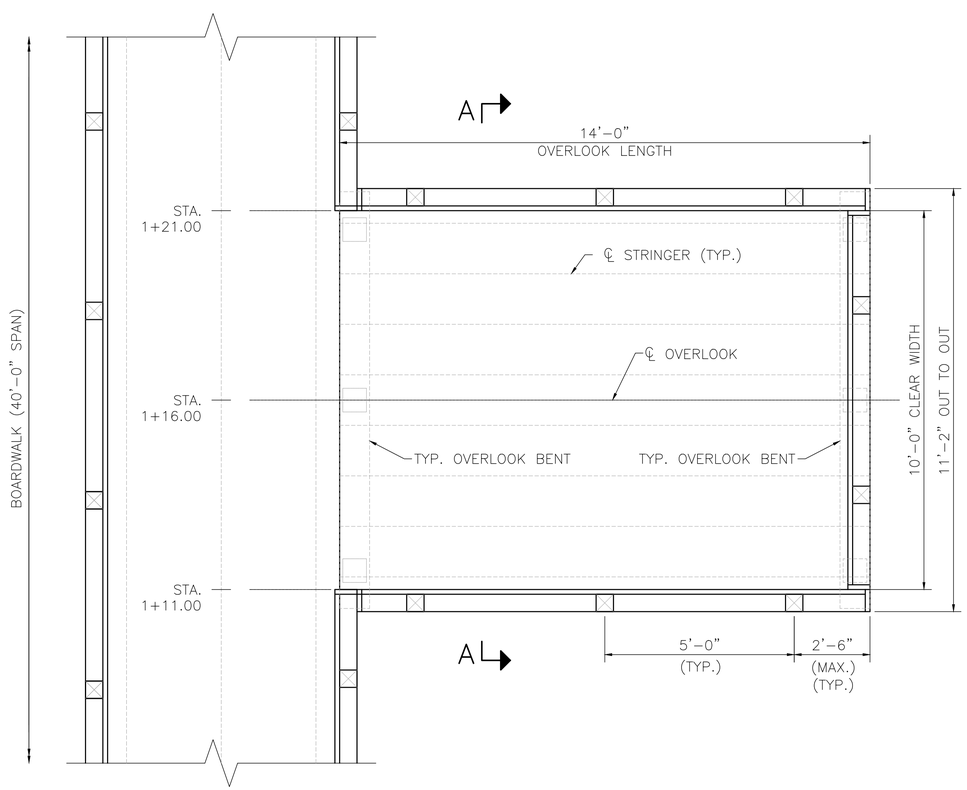

OVERLOOK PLAN

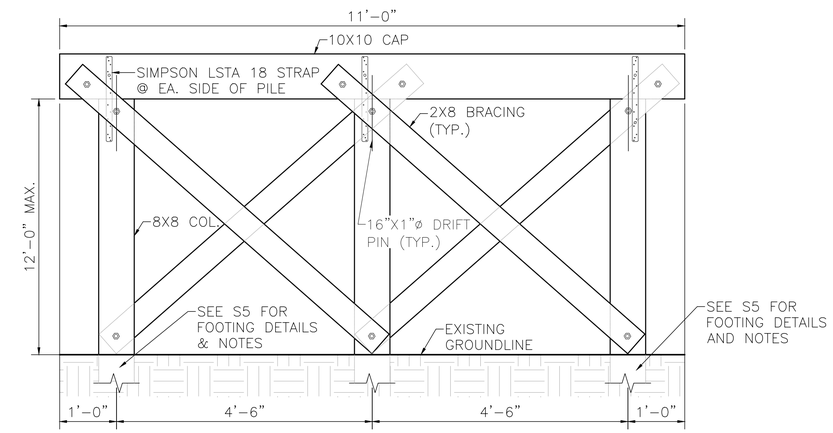

TYPICAL OVERLOOK BENT

DESIGNED:	WILLIAM M. HOLLIFIELD
DRAWN:	WILLIAM M. HOLLIFIELD
CHECKED:	ADAM G. FELMLEE
ENGINEER OF RECORD:	WILLIAM M. HOLLIFIELD

NORTH CAROLINA PROFESSIONAL SEAL 057706 ENGINEER WILL HOLLIFIELD

Will Hollifield
04/02/25

Areté ENGINEERS
ARETE ENGINEERS, PLLC
7668 Valley Blvd.
P.O. Box 745
Blowing Rock, NC 28605
FIRM LICENSE No. P-1357

ARETE JOB #4026

OVERLOOK DETAILS

BOONE GORGES TRAIL BOARDWALK

MIDDLE FORK GREENWAY
DOWNSTREAM OF PAYNE BRANCH RD.

REVISIONS

NO.	BY.	DATE:	NO.	BY.	DATE:
1			2		
3			4		

SHEET NO. S7

TOTAL SHEETS 7

ARETÉ ENGINEERS

MIDDLEFORK GREENWAY – BOONE GORGE PARK

BRIDGE 1 (UPSTREAM BRIDGE) ABUTMENT DESIGN

ABBREVIATIONS	
A	AREA
AASHTO	AMERICAN ASSOCIATION OF STATE HIGHWAY AND TRANSPORTATION OFFICIALS
ADH.	ADHESIVE
AGG.	AGGREGATE
AISC	AMERICAN INSTITUTE OF STEEL CONSTRUCTION
ALT.	ALTERNATE
ANSI	AMERICAN NATIONAL STANDARDS INSTITUTE
APPRH.	APPROACH
APPROX.	APPROXIMATE
ASTM	AMERICAN SOCIETY FOR TESTING MATERIALS
BGS	BELOW GROUND SURFACE
BOT.	BOTTOM
BRG.	BEARING
CTS.	CENTERS
CIPL	CAST IN PLACE
C/L	CENTERLINE
CON.	CONNECTION
CONC.	CONCRETE
COORD.	COORDINATE
DGN.	DESIGN
DIM.	DIMENSION
DWG.	DRAWING
EA.	EACH
EL.	ELEVATION
ENGR.	ENGINEER
EXIST.	EXISTING
F TO F	FACE TO FACE
FDN.	FOUNDATION
FT.	FEET
GALV.	GALVANIZED
GR.	GRADE
HORIZ.	HORIZONTAL
IN.	INCH
LB.	POUND
LONG.	LONGITUDINAL
MAX.	MAXIMUM
MIN.	MINIMUM
O/C	ON CENTER
OD	OUTSIDE DIAMETER
PAR.	PARALLEL
PVC	POLYVINYL CHLORIDE
REINF.	REINFORCEMENT
SCH.	SCHEDULE
STD.	STANDARD
STL.	STEEL
STR.	STRUCTURE
W.W.F.	WELDED WIRE FABRIC

SHEET INDEX	
S1	COVER SHEET
S2	STANDARD NOTES
S3	BRIDGE PLAN & ELEVATION
S4	BRIDGE CROSS SECTION
S5	END BENT 1
S6	END BENT 2
S7	WINGWALL –W3–
S8	WINGWALL –W4–
S9	WINGWALL –W1– & –W2–
S10	RIP–RAP

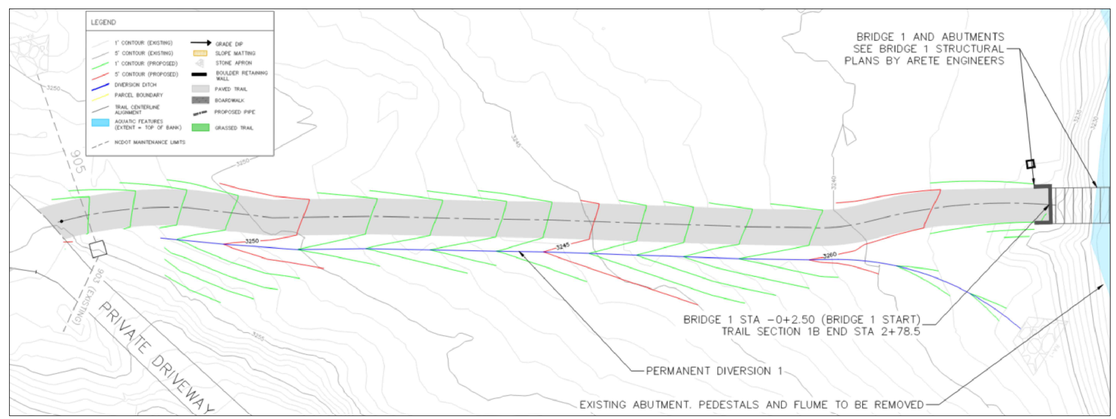

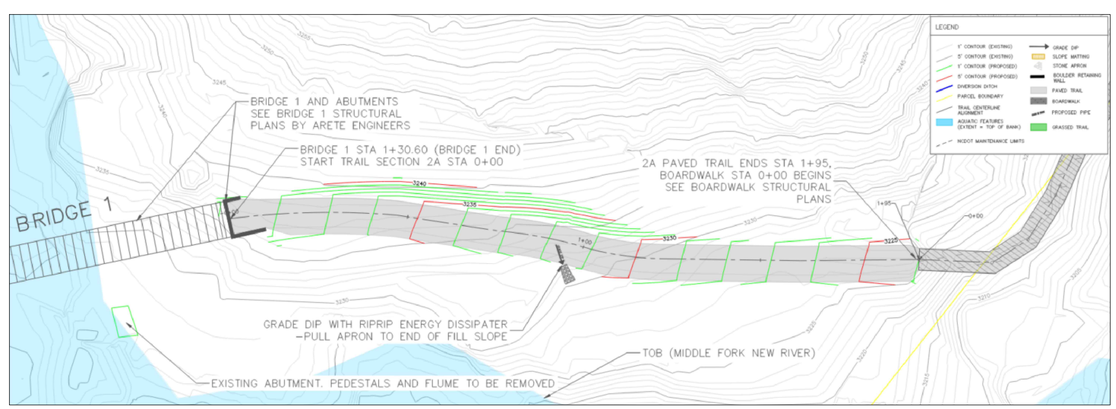

Areté ENGINEERS
ARETÉ ENGINEERS, PLLC
7668 Valley Blvd.
P.O. Box 745
Blowing Rock, NC 28605
FIRM LICENSE No. P–1357

NORTH CAROLINA PROFESSIONAL SEAL 057706 ENGINEER WILL HOLLIFIELD

Will Hollifield
03/24/25

BOONE GORGES SECTION BRIDGE ABUTMENT
FOR
INTERFACE ENVIRONMENTAL CONSULTING, LLC
AT
LAT: 36.188495, LONG: –81.656035

DATE	3/26/25
DRAWN BY	DAT
CHECK BY	WMH
APPROVED BY	AGF
PROJECT NO.	3676

SHEET CONTENTS

COVER SHEET

REVISIONS:

SHEET NO.

S–1

TOTAL SHEETS

10

DESIGN DATA:

SPECIFICATIONS – – – – – – – – A.A.S.H.T.O. GUIDE SPECIFICATIONS FOR DESIGN OF FRP PEDESTRIAN BIRDGES, 2ND EDITION

A.A.S.H.T.O. LRFD BRIDGE DESIGN SPECIFICATIONS

LIVE LOAD ---------- 90 PSF
IMPACT ALLOWANCE ---------- SEE A.A.S.H.T.O.
STRESS IN EXTREME FIBER OF
STRUCTURAL STEEL – ASSHTO M270 GRADE 26 -------- 36,000 LBS. PER SQ. IN.
– AASHTO M270 GRADE 50W ------- 50,000 LBS. PER SQ. IN
– AASHTO M270 GRADE 50 -------- 50,000 LBS. PER SQ. IN.
REINFORCING STEEL IN TENSION – GRADE 60 ----------60,000 LBS. PER SQ. IN.
CONCRETE IN COMPRESSION ----------3,000 LBS. PER SQ. IN.
CONCRETE IN SHEAR ----------SEE A.A.S.H.T.O.
STRUCTURAL TIMBER – TREATED OR UNTREATED ---------- 1,800 LBS. PER SQ. IN.
EXTREME FIBER STRESS
COMPRESSION PERPENDICULAR TO GRAIN OF ---------- 375 LBS. PER SQ. IN.
OF TIMBER
EQUIVALENT FLUID PRESSURE OF EARTH ---------- 60 LBS. PER CU. FT. (MIN.)

MATERIAL AND WORKMANSHIP:

EXCEPT AS MAY OTHERWISE BE SPECIFIED ON PLANS OR IN THE SPECIAL PROVISIONS. ALL MATERIAL AND WORKMANSHIP SHALL BE IN ACCORDANCE WITH THE 2018 "STANDARD SPECIFICATIONS FOR ROADS AND STRUCTURES" OF THE N.C. DEPARTMENT OF TRANSPORTATION.

CONCRETE:

UNLESS OTHERWISE REQUIRED ON PLANS, CLASS A CONCRETE SHALL BE USED FOR ALL PORTIONS OF ALL STRUCTURES WITH THE EXCEPTION THAT: CLASS AA CONCRETE SHALL BE USED IN BRIDGE SUPERSTRUCTURES, ABUTMENT BACKWALLS, AND APPROACH SLABS: AND CLASS B CONCRETE SHALL BE USED FOR SLOPE PROTECTION AND RIP RAP. CONCRETE SHALL BE CURED IN COMPLIANCE WITH NCDOT SPECIFICATIONS.

CONCRETE CHAMFERS:

UNLESS OTHERWISE NOTED ON THE PLANS, ALL EXPOSED CORNERS ON STRUCTURES SHALL BE CHAMFERED 3/4" WITH THE FOLLOWING EXCEPTIONS: TOP CORNERS OF CURBS MAY BE ROUNDED TO 1–1/2" RADIUS WHICH IS BUILT INTO CURB FORMS; CORNERS OF TRANSVERSE FLOOR EXPANSION JOINTS SHALL BE ROUNDED WITH A 1/4" FINISHING TOOL UNLESS OTHERWISE REQUIRED ON PLANS; AND CORNERS OF EXPANSION JOINTS IN THE ROADWAY FACES AND TOPS OF CURBS AND SIDEWALKS SHALL BE ROUNDED TO A 1/4" RADIUS WITH A FINISHING STONE OR TOOL UNLESS OTHERWISE REQUIRED ON PLANS.

DOWELS:

DOWELS, UNLESS OTHERWISE NOTES, SHALL BE EMBEDDED A MINIMUM OF 6" INTO EXISTING CONCRETE AND GROUTED INTO PLACE WITH 1:2 CEMENT MORTAR.

ALLOWANCE FOR DEAD LOAD DEFLECTION, SETTLEMENT, ETC. IN CASTING SUPERSTRUCTURES:

BRIDGES SHALL BE BUILT ON THE GRADE OR VERTICAL CURVE SHOWN ON PLANS. SLABS,CURBS, AND PARAPETS SHALL CONFORM TO THE GRADE OR CURVE.

ALL DIMENSIONS WHICH ARE GIVEN IN SECTION AND ARE AFFECTED BY DEAD LOAD DEFLECTIONS ARE DIMENSIONS AT CENTER LINE OF BEARING UNLESS OTHERWISE NOTED ON THE PLANS. IN SETTING FORMS FOR STEEL BEAM BRIDGES AND PRESTRESSED CONCRETE GIRDER BRIDGES, ADJUSTMENTS SHALL BE MADE DUE TO THE DEAD LOAD DEFLECTIONS FOR THE ELEVATIONS SHOWN. WHERE BLOCKS ARE SHOWN OVER BEAMS FOR BUILDING UP TO THE SLAB, THE VERTICAL DIMENSIONS OF THE BLOCKS SHALL BE ADJUSTED BETWEEN BEARING TO COMPENSATE FOR DEAD LOAD DEFLECTIONS, VERTICAL CURVE ORDINATE, AND ACTUAL BEAM CHAMBER. WHERE BOTTOM OF SLAB IS IN LINE WITH BOTTOM OF TOP FLANGES, DEPTH OF SLAB BETWEEN BEARINGS SHALL BE ADJUSTED TO COMPENSATE FOR DEAD LOAD DEFLECTION, VERTICAL CURVE ORDINATE, AND ACTUAL BEAM CHAMBER.

IN SETTING FALSEWORK AND FORMS FOR REINFORCED CONCRETE SPANS, AN ALLOWANCE SHALL BE MADE FOR DEAD LOAD DEFLECTIONS, SETTLEMENT OF FALSEWORK, AND PERMANENT CHAMBER WHICH SHALL BE PROVIDED FOR IN ADDITION TO THE ELEVATIONS SHOWN. AFTER REMOVAL OF THE FALSEWORK, THE FINISHED STRUCTURES SHALL CONFORM TO THE PROFILE AND ELEVATIONS SHOWN ON THE PLANS AND CONSTRUCTION ELEVATIONS FURNISHED BY THE ENGINEER.

DETAILED DRAWINGS FOR FALSEWORK OR FORMS FOR BRIDGE SUPERSTRUCTURE AND ANY STRUCTURE OR PARTS OF A STRUCTURE AS NOTED ON THE PLANS SHALL BE SUBMITTED TO THE ENGINEER FOR APPROVAL BEFORE CONSTRUCTION OF THE FALSEWORK OR FORMS IS STARTED.

REINFORCING STEEL:

ALL REINFORCING STEEL SHALL BE DEFORMED. DIMENSIONS RELATIVE TO PLACEMENT OF REINFORCING ARE TO CENTERS OF BARS UNLESS OTHERWISE INDICATED IN THE PLANS. DIMENSIONS ON BAR DETAILS ARE TO CENTERS OF BARS OR ARE OUT TO OUT AS INDICATED ON PLANS.

WIRE BAR SUPPORTS SHALL BE PROVIDED FOR REINFORCING STEEL WHERE INDICATED ON THE PLANS. WHEN BAR SUPPORT PIECES ARE PLACE IN CONTINUOUS LINES, THEY SHALL BE SO PLACED THAT THE ENDS OF THE SUPPORTING WIRES SHALL BE LAPPED TO LOCK LEGS ON ADJOINING PIECES.

LAP SPLICES SHALL BE A MINIMUM LENGTH OF 40X DIAMETER OF BAR.

SPECIAL NOTES:

GENERALLY, IN CASE OF DISCREPANCY, THIS STANDARD SHEET OF NOTES SHALL GOVERN OVER THE SPECIFICATIONS, BUT THE REMAINDER OF THE PLANS SHALL GOVERN OVER NOTES HEREON, AND SPECIAL PROVISIONS SHALL GOVERN OVER ALL.

CONSTRUCTION SEQUENCE:

PLACE BACKFILL IN ACCORDANCE WITH NCDOT SPECIFICATIONS. PLACE BACKFILL ABOVE THE BEARING SEAT AFTER THE PREFABRICATED FRP BRIDGE IS SET ON THE END BENTS.

PILE SPECIFICATIONS

H–PILES SHALL BE 50 KSI STEEL. A MINIMUM OF 1 PRODUCTION PILE SHALL BE TESTED AT EACH END BENT.

Areté ENGINEERS
ARETÉ ENGINEERS, PLLC
7668 Valley Blvd.
P.O. Box 745
Blowing Rock, NC 28605
FIRM LICENSE No. P–1357

NORTH CAROLINA PROFESSIONAL SEAL 057706 ENGINEER WILL HOLLIFIELD

Will Hollifield
03/24/25

BOONE GORGES SECTION BRIDGE ABUTMENT
FOR
INTERFACE ENVIRONMENTAL CONSULTING, LLC
AT
LAT: 36.188495, LONG: –81.656035

DATE	3/26/25
DRAWN BY	DAT
CHECK BY	WMH
APPROVED BY	AGF
PROJECT NO.	3676

SHEET CONTENTS

STANDARD NOTES

REVISIONS:

SHEET NO.

S–2

TOTAL SHEETS

10

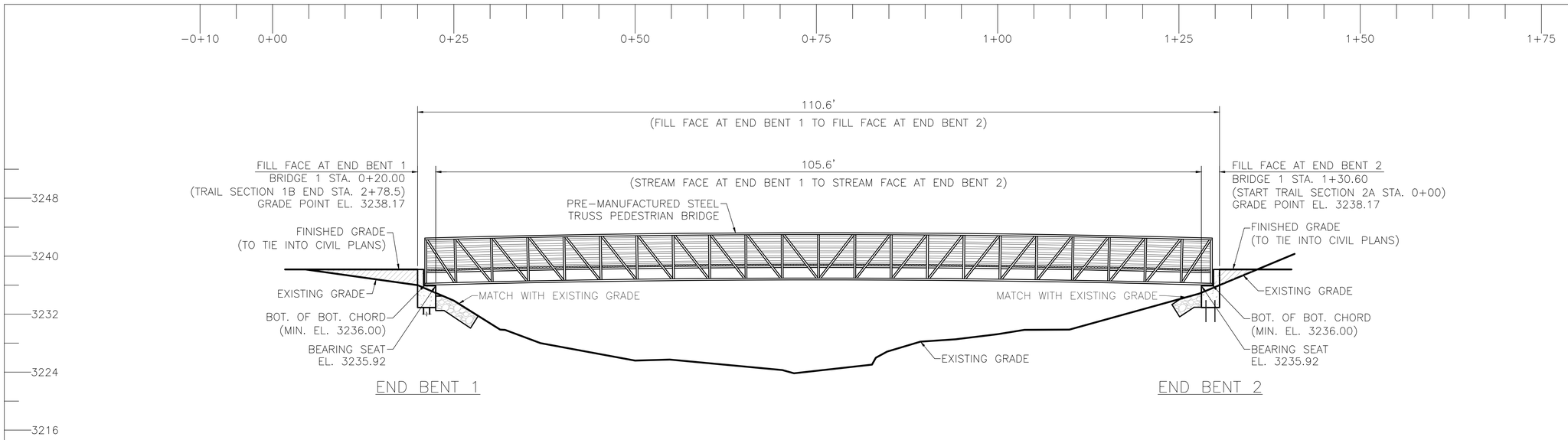

SECTION ALONG CENTERLINE OF BRIDGE

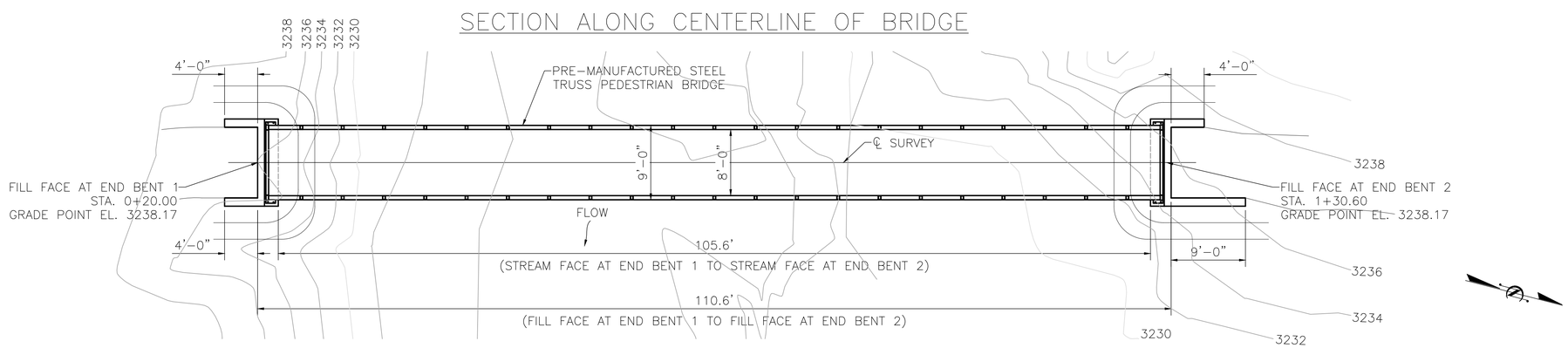

PLAN VIEW

FOUNDATION NOTES:

1. FOR PILES, SEE PILES CONSTRUCTION SPECIFICATIONS.
2. PILES AT END BENT 1 ARE DESIGNED FOR AN ALLOWABLE PILE CAPACITY OF 25 TONS.
3. PILES AT END BENT 1 ARE DESIGNED FOR AN ULTIMATE PILE CAPACITY OF 50 TONS.
4. IT HAS BEEN ESTIMATED THAT A PILE DRIVING HAMMER WITH AN EQUIVALENT RATED ENERGY IN THE RANGE OF 5,000 FT-LBS TO 15,000 FT-LBS PER BLOW WILL BE REQUIRED TO DRIVE PILES AT END BENT 1. THIS ESTIMATED ENERGY RANGE DOES NOT RELEASE THE CONTRACTOR FROM PROVIDING DRIVING EQUIPMENT IN ACCORDANCE WITH THE PILES CONSTRUCTION SPECIFICATIONS.
5. PILE EXCAVATION IS REQUIRED AT END BENT 1. EXCAVATE HOLES AT PILE LOCATIONS WITH A MINIMUM PENETRATION OF 12 FEET BELOW BOTTOM OF CAP/ FOR PILE EXCAVATION SEE PILES CONSTRUCTION SPECIFICATIONS. UPON COMPLETION OF PILE EXCAVATION, STAND AND DRIVE PILES.
6. THE SPREAD FOOTING AT END BENT 2 IS DESIGNED FOR AN ALLOWABLE BEARING CAPACITY OF 4,000 PSF. THE FOOTING SHALL BEAR ON CLEAN, SOUND ROCK. CHECK FIELD CONDITIONS FOR THE REQUIRED ALLOWABLE BEARING CAPACITY OF 4,000 PSF JUST BEFORE PLACING CONCRETE.
7. END BENT SLOPES SHALL BE COVERED WITH RIP RAP SLOPE PROTECTION FROM THE TOE OF SLOPE TO BERM TO PROTECT APPROACH EMBANKMENT FROM SCOUR.
8. NO WAITING PERIOD IS REQUIRED BEFORE BEGINNING END BENT CONSTRUCTION.

DRILLED-IN PILE CONSTRUCTION SPECIFICATIONS

THE PILE EXCAVATION HOLE DIAMETER SHOULD HAVE A MINIMUM OF 3 INCHES OF CLEARANCE AROUND THE ENTIRETY OF THE STEEL H-PILE. WE RECOMMEND INSTALLING DRILLED-IN PILES A MINIMUM OF 10 FEET BELOW THE BOTTOM OF THE CAP ELEVATION AND AT LEAST 2 TO 3 FEET INTO PWR OR BEDROCK. THE BOTTOM FIVE FEET OF THE EXCAVATION SHOULD BE FILLED WITH CONCRETE. THE REMAINDER OF THE OPEN EXCAVATION MAY BE FILLED WITH FLOWABLE FILL, SUCH AS LEAN CONCRETE, #57 STONE, OR SAND UP TO THE GROUND SURFACE.

DRILLED-IN PILE INFORMATION		
ALLOWABLE PILE CAPACITY: 25 TONS (50 KIPS)	END BENT 1	END BENT 2
ESTIMATED PILE EMBEDMENT INTO CAP (FT)	1	SPREAD FOOTING DRILLED INTO BEDROCK
ESTIMATED PENETRATION INTO PWR/BEDROCK (FT)	2.0	
ESTIMATED PILE PENETRATION, BGS (FT)	26.0	
ESTIMATED PILE LENGTH (FT) PER PILE	29.0	
AVERAGE PILE LENGTH (FT) PER PILE	30	

Areté ENGINEERS
ARETÉ ENGINEERS, PLLC
7668 Valley Blvd.
P.O. Box 745
Blowing Rock, NC 28605
FIRM LICENSE No. P-1357

NORTH CAROLINA PROFESSIONAL SEAL 057706 ENGINEER WILL HOLLIFIELD

Will Hollifield
03/24/25

BOONE GORGES SECTION BRIDGE ABUTMENT
FOR
INTERFACE ENVIRONMENTAL CONSULTING, LLC
AT
LAT: 36.188495, LONG: -81.656035

DATE	3/26/25
DRAWN BY	DAT
CHECK BY	WMH
APPROVED BY	AGF
PROJECT NO.	3676

SHEET CONTENTS

ELEVATION & PLAN ALONG CENTERLINE OF BRIDGE

REVISIONS:

SHEET NO.

S-3

TOTAL SHEETS

10

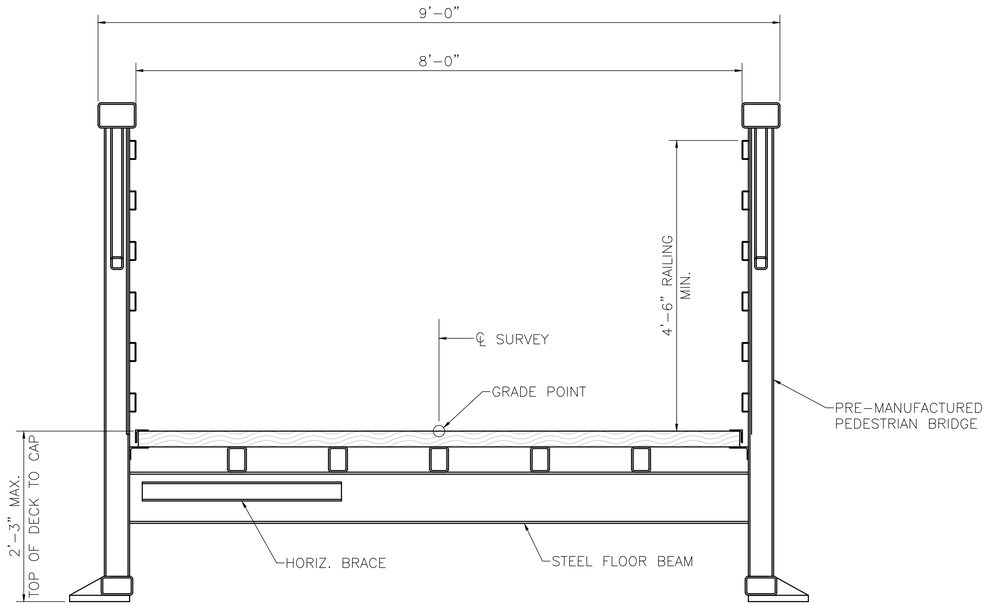

TYPICAL SECTION (PRE-MANUFACTURED BRIDGE)

BEGIN STATION	END STATION	BRIDGE LENGTH
0+20.00	1+30.60	108.6'

DISTANCE FROM BEGIN STATION TO END STATION INCLUDES 10" BACKWALL AND 2" EXP. JT. AT EACH END*

PRE-MANUFACTURED PEDESTRIAN BRIDGE NOTES

1. BRIDGE LOADING & GEOMETRY IS ESTIMATED. AFTER SHOP DRAWINGS FOR THE PREMANUFACTURED PEDESTRIAN BRIDGE ARE SUBMITTED, CONSTRUCTION ADMINISTRATOR SHALL FORWARD SHOP DRAWINGS TO ARETE ENGINEERS FOR VERIFICATION THAT THE SUBSTRUCTURE CAN SUPPORT CALCULATED BRIDGE LOADS.
2. PRE-MANUFACTURED PEDESTRIAN BRIDGE DESIGNED PER AASHTO LRFD GUIDE SPECIFICATIONS FOR DESIGN OF PEDESTRIAN BRIDGES (LATEST EDITION).
3. THIS BRIDGE IS LOCATED IN SEISMIC ZONE 1.
4. FABRICATOR OF PREMANUFACTURED PEDESTRIAN BRIDGE SHALL INDICATE THE LOCATION OF DRAINAGE HOLES FOR THE BRIDGE TUBULAR MEMBERS IN THE SHOP DRAWINGS.

Aretè ENGINEERS
ARETÉ ENGINEERS, PLLC
7668 Valley Blvd.
P.O. Box 745
Blowing Rock, NC 28605
FIRM LICENSE No. P-1357

NORTH CAROLINA PROFESSIONAL SEAL 057706 ENGINEER WILL HOLLIFIELD
03/24/25

BOONE GORGES SECTION BRIDGE ABUTMENT
FOR
INTERFACE ENVIRONMENTAL CONSULTING, LLC
AT
LAT: 36.188495, LONG: -81.656035

DATE	3/26/25
DRAWN BY	DAT
CHECK BY	WMH
APPROVED BY	AGF
PROJECT NO.	3676

SHEET CONTENTS

TYPICAL SECTION OF PRE-MANUFACTURED BRIDGE 1

REVISIONS:

SHEET NO.

S-4

TOTAL SHEETS

10

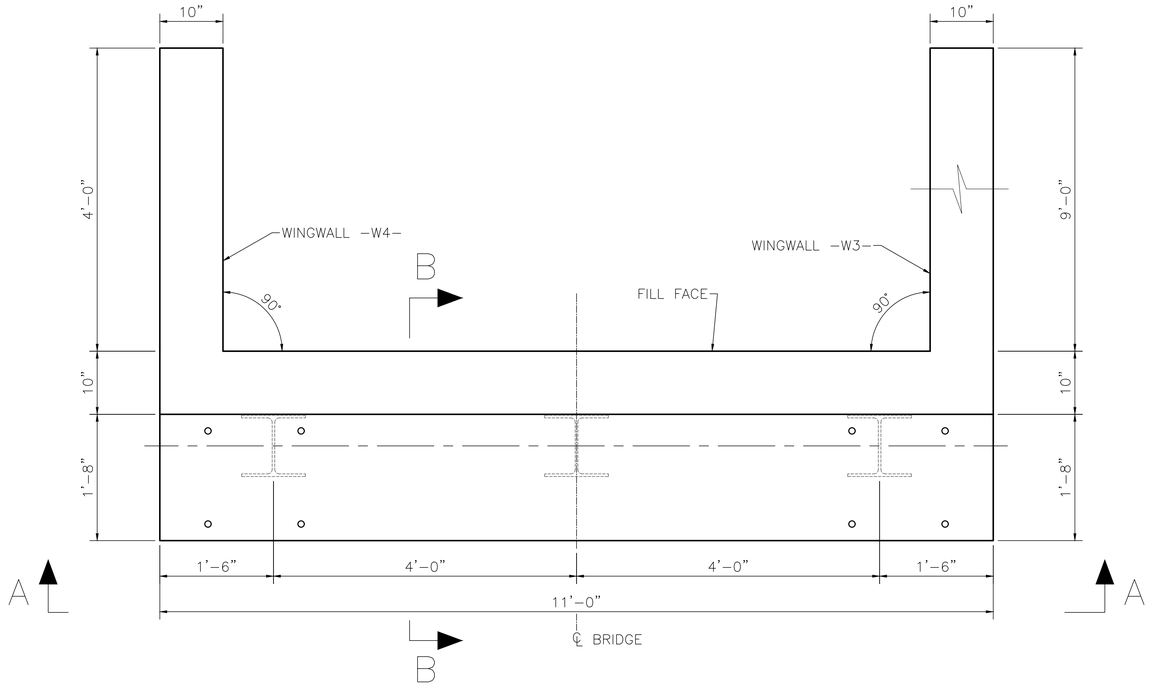

PLAN

NOTE:

DIMENSIONS MARKED WITH AN ASTERISK (*) ARE TO BE ADJUSTED BY ARETÉ ENGINEERS AFTER PREMANUFACTURED BRIDGE IS DESIGNED. DIMENSIONS, CONCRETE, & REINFORCING STEEL QUANTITIES ARE SUBJECT TO CHANGE UNTIL AFTER SHOP DRAWINGS ARE REVIEWED AND APPROVED.

UPON RECEIPT OF BRIDGE SHOP DRAWINGS, CONSTRUCTION ADMINISTRATOR SHALL FOREWARD DRAWINGS TO ARETÉ ENGINEERS AFTER WHICH ARETÉ WILL ISSUE UPDATED BRIDGE PLANS.

1. STEEL PILES AND CAP BEAM, USE HP10X42, ASTM A 572 GR. 50 OR APPROVED EQUIVALENT.
2. IF FIELD CONDITIONS DIFFER FROM PLAN DESIGN, IMMEDIATELY NOTIFY ENGINEER.
3. MATCH BACKWALL HEIGHT TO TOP OF DECK AFTER BRIDGE IS SET WITH DECKING.

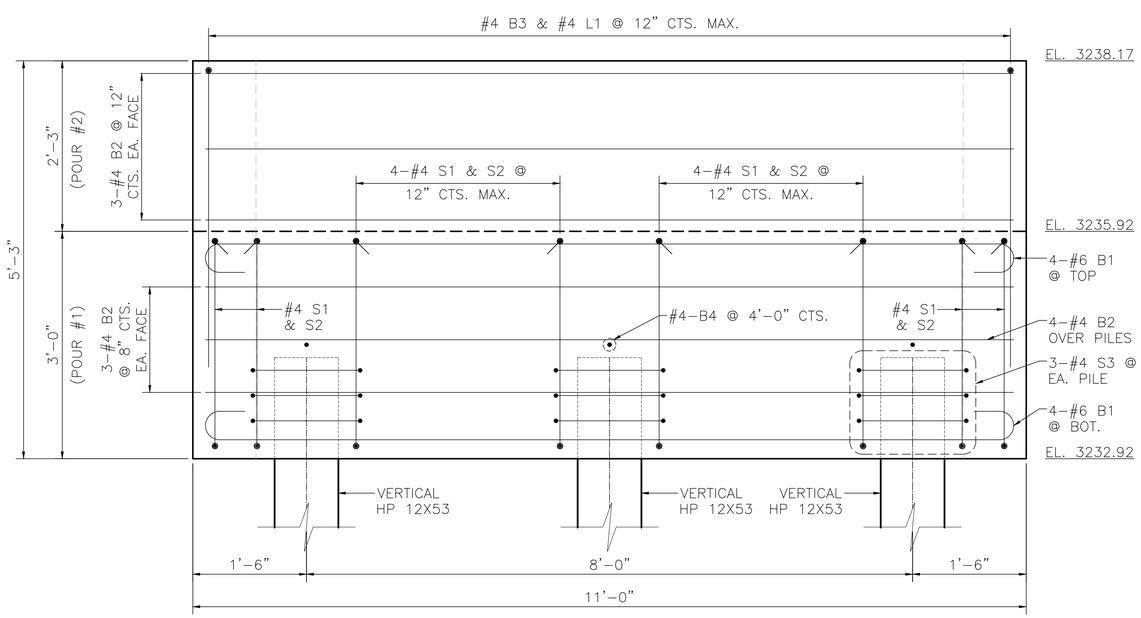

ELEVATION (A-A)

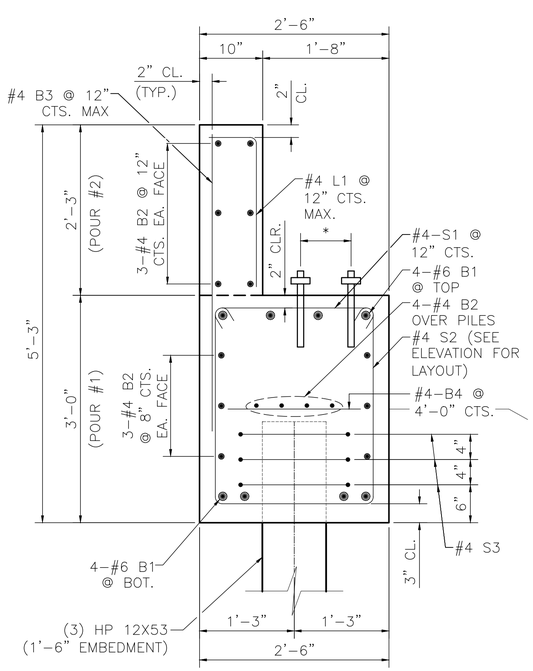

SECTION (B-B)

SEE S-9 FOR ABUTMENT DRAINAGE DETAIL

BILL OF MATERIAL (END BENT 1)

BAR	NO.	SIZE	TYPE	LENGTH	WEIGHT
B1	8	#6	1	11'-10"	142
B2	16	#4	STR	10'-8"	114
B3	12	#4	STR	3'-8"	29
B4	3	#4	STR	2'-2"	4
S1	12	#4	2	2'-11"	23
S2	12	#4	3	8'-1"	65
S3	9	#4	4	6'-6"	39
L1	12	#4	5	2'-6"	20

REINFORCING STEEL (FOR END BENT 2) 437 LBS.

CLASS A CONCRETE BREAKDOWN (FOR END BENT 2)

POUR #1 (CAP & LOWER WINGS)	4.26 C.Y.
POUR #2 (BACKWALL & UPPER WINGS)	1.67 C.Y.
TOTAL CLASS A CONCRETE	5.93 C.Y.

BAR TYPES

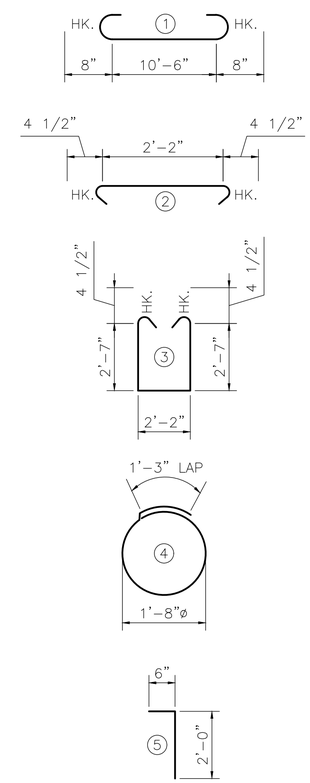

Areté ENGINEERS
ARETÉ ENGINEERS, PLLC
7668 Valley Blvd.
P.O. Box 745
Blowing Rock, NC 28605
FIRM LICENSE No. P-1357

NORTH CAROLINA PROFESSIONAL SEAL 057706 ENGINEER WILL HOLLIFIELD

Will Hollifield
03/24/25

BOONE GORGES SECTION BRIDGE ABUTMENT
FOR
INTERFACE ENVIRONMENTAL CONSULTING, LLC
AT
LAT: 36.188495, LONG: -81.656035

DATE	3/26/25
DRAWN BY	DAT
CHECK BY	WMH
APPROVED BY	AGF
PROJECT NO.	3676

SHEET CONTENTS

END BENT 1 PLAN, ELEVATION, AND SECTION

REVISIONS:

SHEET NO.

S-5

TOTAL SHEETS

10

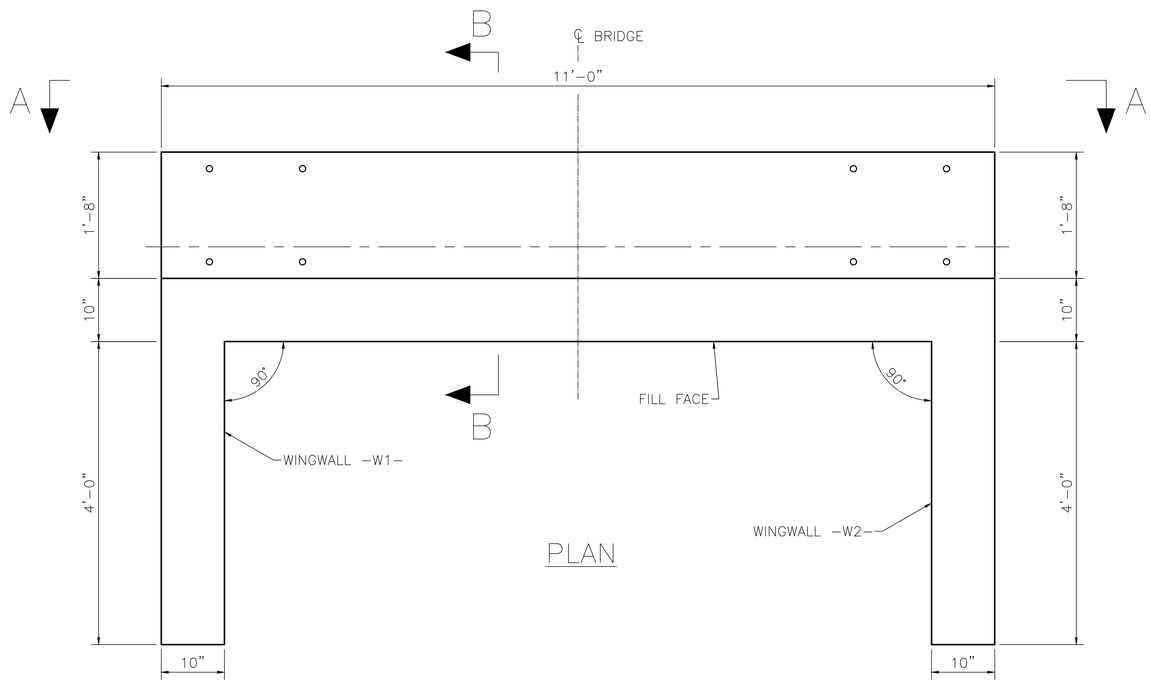

PLAN

NOTE:

1. DIMENSIONS MARKED WITH AN ASTERISK (*) ARE TO BE ADJUSTED BY ARETÉ ENGINEERS AFTER PREMANUFACTURED BRIDGE IS DESIGNED. DIMENSIONS, CONCRETE, & REINFORCING STEEL QUANTITIES ARE SUBJECT TO CHANGE UNTIL AFTER SHOP DRAWINGS ARE REVIEWED AND APPROVED.

   UPON RECEIPT OF BRIDGE SHOP DRAWINGS, CONSTRUCTION ADMINISTRATOR SHALL FORWARD DRAWINGS TO ARETÉ ENGINEERS AFTER WHICH ARETÉ WILL ISSUE UPDATED BRIDGE PLANS.

2. DIMENSIONS MARKED WITH (2) ASTERISKS (**) ARE ESTIMATED USING THE BEST INFORMATION AVAILABLE. IF COMPETENT ROCK IS ENCOUNTERED BELOW EL. 3234.92FT, NOTIFY ENGINEER AND ARETÉ WILL ADJUST REINFORCING AND CONCRETE QUANTITIES/DIMENSIONS ACCORDINGLY AND RE-SUBMIT PLANS.

3. MATCH BACKWALL HEIGHT TO TOP OF DECK AFTER BRIDGE IS SET WITH DECKING.

BILL OF MATERIAL (END BENT 2)

BAR	NO.	SIZE	TYPE	LENGTH	WEIGHT
B1	8	#6	1	11'-10"	142
B2	8	#4	STR	10'-8"	57
B3	12	#4	STR	3'-8"	29
D1	8	#8	STR	3'-4"	72
S1	12	#4	2	2'-11"	23
S2	12	#4	3	6'-1"	49
L1	12	#4	4	2'-6"	20

REINFORCING STEEL (FOR END BENT 1) 392 LBS.

CLASS A CONCRETE BREAKDOWN (FOR END BENT 1)

POUR #1 (CAP & LOWER WINGS)	2.53 C.Y.
POUR #2 (BACKWALL & UPPER WINGS)	1.25 C.Y.
TOTAL CLASS A CONCRETE	3.78 C.Y.

BAR TYPES

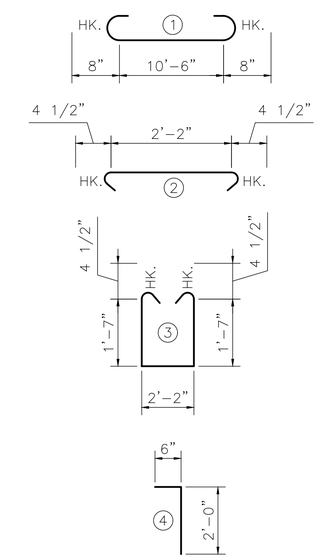

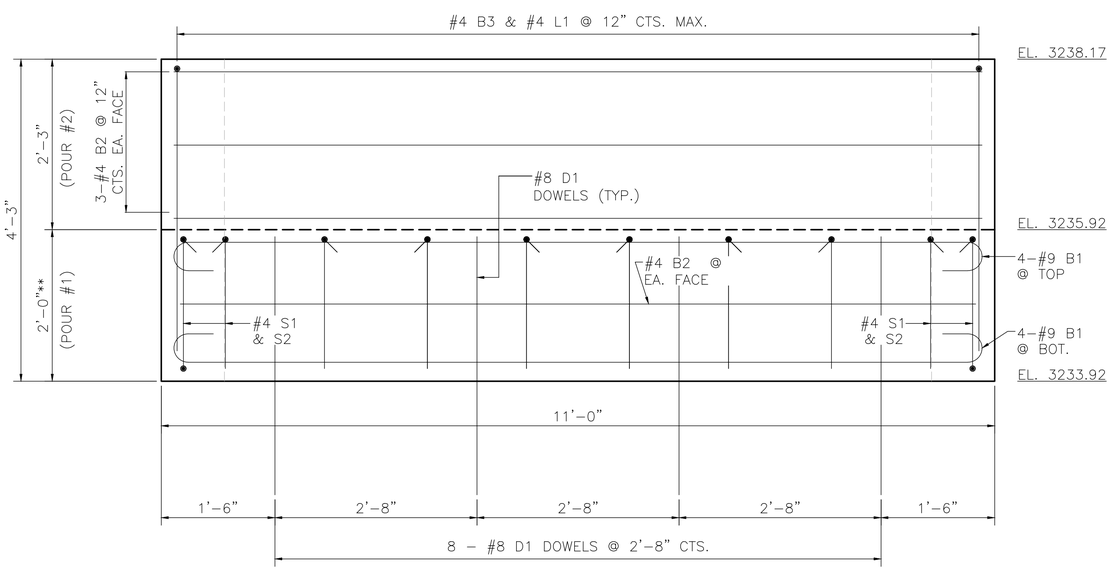

ELEVATION (A-A)

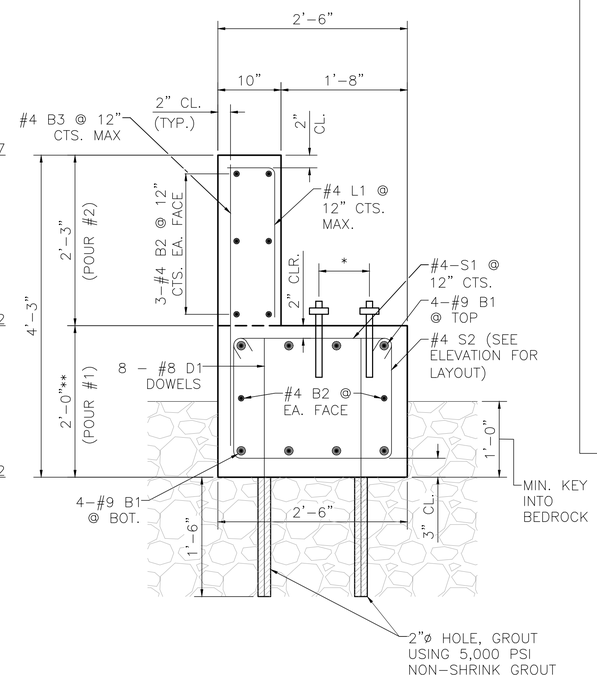

SECTION (B-B)

SEE S-8 FOR ABUTMENT DRAINAGE DETAIL

Areté ENGINEERS
ARETÉ ENGINEERS, PLLC
7668 Valley Blvd.
P.O. Box 745
Blowing Rock, NC 28605
FIRM LICENSE No. P-1357

NORTH CAROLINA PROFESSIONAL SEAL 057706 ENGINEER WILL HOLLIFIELD

Will Hollifield
03/24/25

BOONE GORGES SECTION BRIDGE ABUTMENT
FOR
INTERFACE ENVIRONMENTAL CONSULTING, LLC
AT
LAT: 36.188495, LONG: -81.656035

DATE	3/26/25
DRAWN BY	DAT
CHECK BY	WMH
APPROVED BY	AGF
PROJECT NO.	3676

SHEET CONTENTS

END BENT 2 PLAN, ELEVATION, AND SECTION

REVISIONS:

SHEET NO.

S-6

TOTAL SHEETS

10

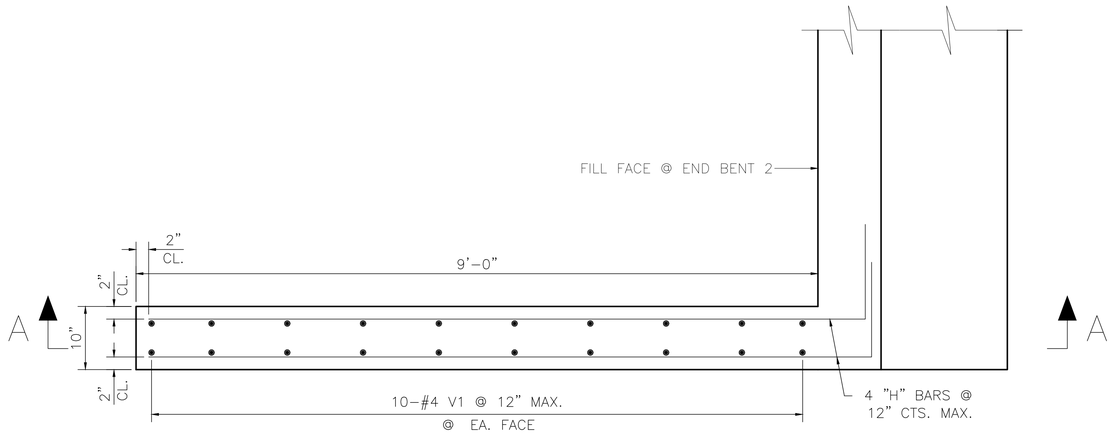

-W3- PLAN

BILL OF MATERIAL (-W3-)					
BAR	NO.	SIZE	TYPE	LENGTH	WEIGHT
H3	8	#4	6	10'-9"	57
H4	10	#4	6	12'-5"	83
V1	20	#4	STR	4'-10"	65
REINFORCING STEEL (FOR -W3-)					205 LBS.

NOTE: WINGWALL CLASS A CONCRETE QUANTITIES INCLUDED IN END BENT QUANTITIES.

BAR TYPES

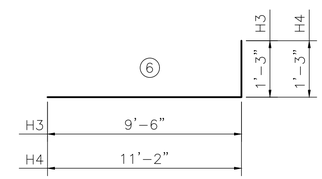

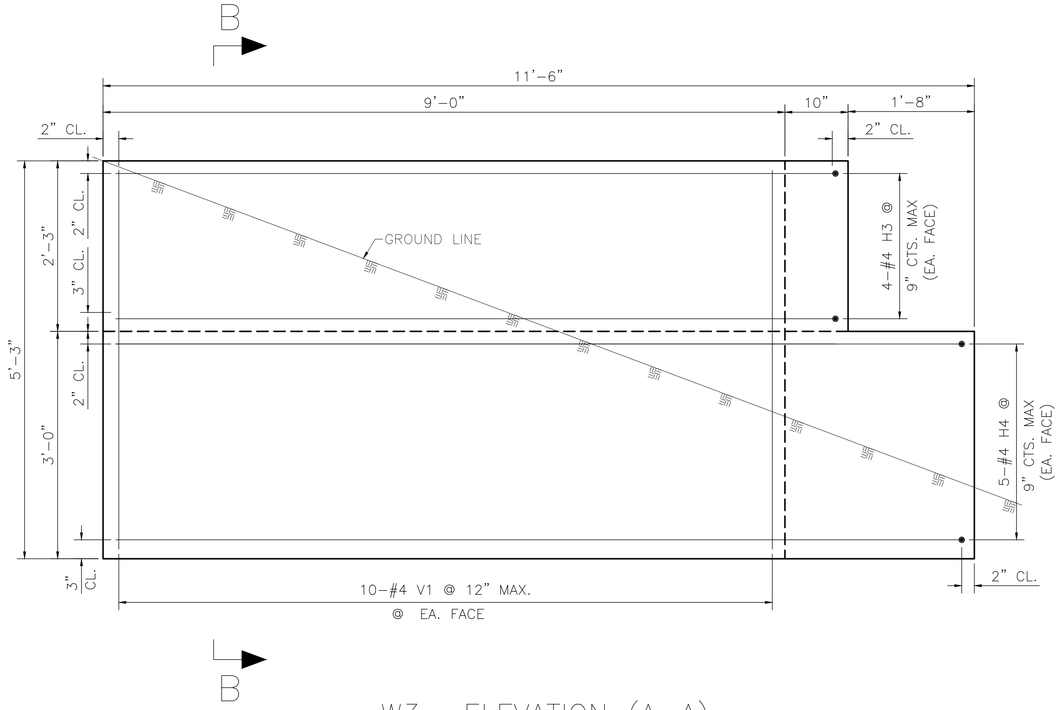

-W3- ELEVATION (A-A)

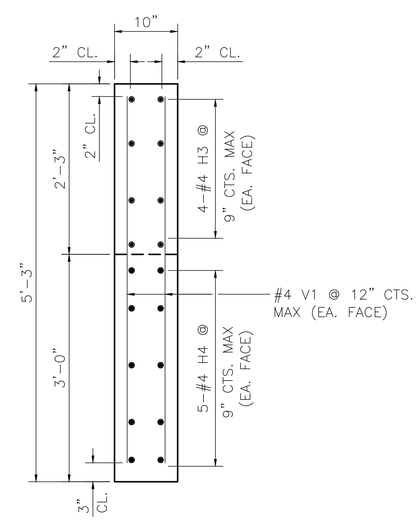

-W3- SECTION (B-B)

Areté ENGINEERS
ARETÉ ENGINEERS, PLLC
7668 Valley Blvd.
P.O. Box 745
Blowing Rock, NC 28605
FIRM LICENSE No. P-1357

NORTH CAROLINA PROFESSIONAL SEAL 057706 ENGINEER WILL HOLLIFIELD

Will Hollifield
03/24/25

BOONE GORGES SECTION BRIDGE ABUTMENT
FOR
INTERFACE ENVIRONMENTAL CONSULTING, LLC
AT
LAT: 36.188495, LONG: -81.656035

DATE	3/26/25
DRAWN BY	DAT
CHECK BY	WMH
APPROVED BY	AGF
PROJECT NO.	3676

SHEET CONTENTS

WINGWALL -W3-

REVISIONS:

SHEET NO.

S-7

TOTAL SHEETS

10

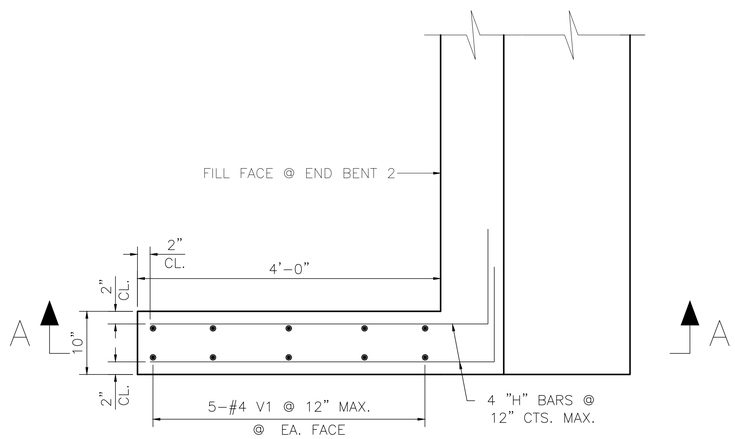

-W4- PLAN

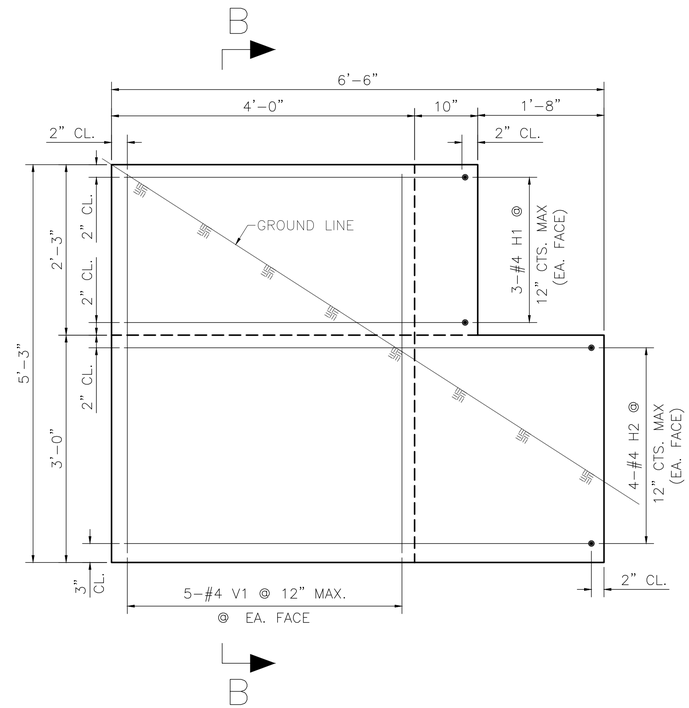

-W4- ELEVATION (A-A)

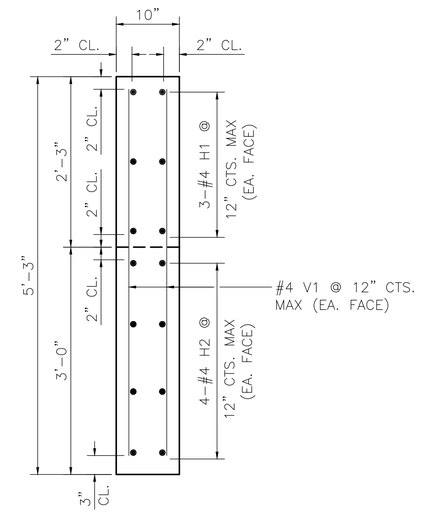

-W4- SECTION (B-B)

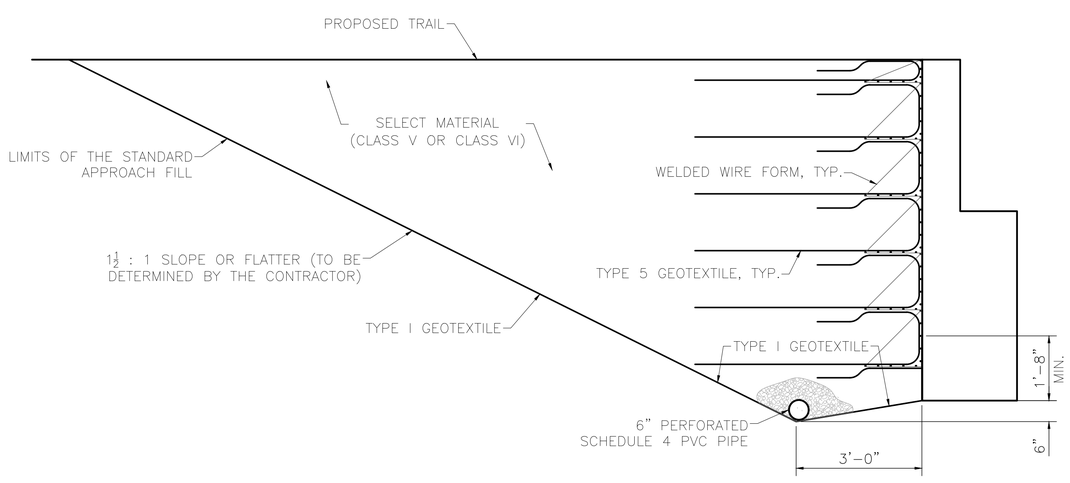

ABUTMENT DRAINAGE DETAIL

BILL OF MATERIAL (-W4-)

BAR	NO.	SIZE	TYPE	LENGTH	WEIGHT
H1	6	#4	6	5'-9"	23
H2	8	#4	6	7'-5"	40
V1	10	#4	STR	4'-10"	32
REINFORCING STEEL (FOR -W4-)					95 LBS.

NOTE: WINGWALL CLASS A CONCRETE QUANTITIES INCLUDED IN END BENT QUANTITIES.

BAR TYPES

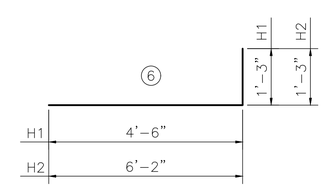

Areté ENGINEERS
ARETÉ ENGINEERS, PLLC
7668 Valley Blvd.
P.O. Box 745
Blowing Rock, NC 28605
FIRM LICENSE No. P-1357

NORTH CAROLINA PROFESSIONAL SEAL 057706 ENGINEER WILL HOLLIFIELD
03/24/25

BOONE GORGES SECTION BRIDGE ABUTMENT
FOR
INTERFACE ENVIRONMENTAL CONSULTING, LLC
AT
LAT: 36.188495, LONG: -81.656035

DATE	3/26/25
DRAWN BY	DAT
CHECK BY	WMH
APPROVED BY	AGF
PROJECT NO.	3676

SHEET CONTENTS

WINGWALL -W4-

REVISIONS:

SHEET NO.

S-8

TOTAL SHEETS

10

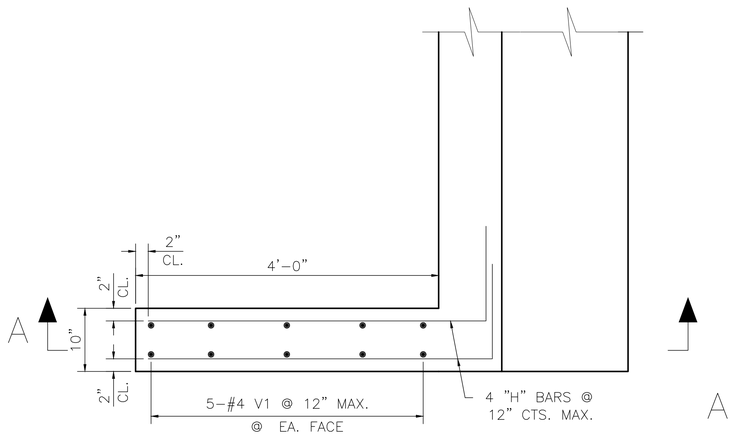

-W1, W2- PLAN

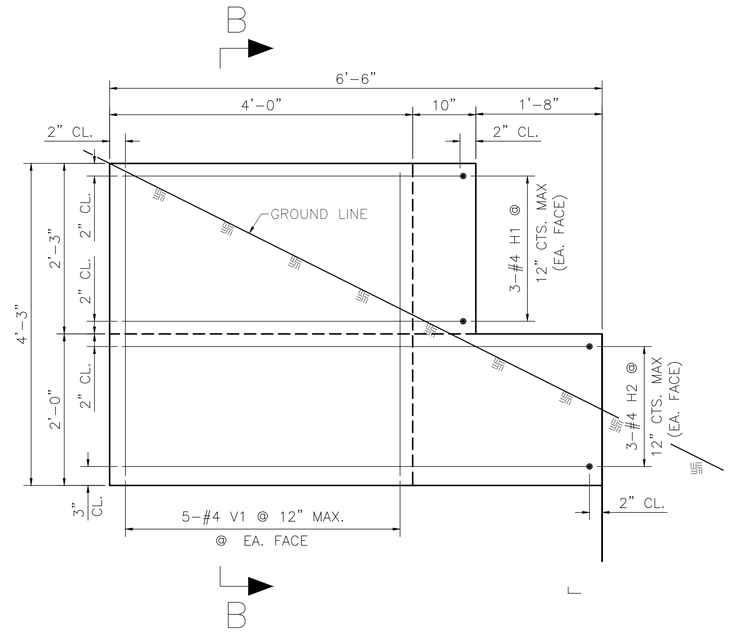

-W1, W2- ELEVATION (A-A)

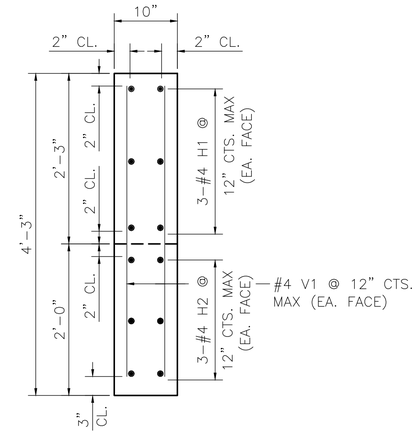

-W1, W2- SECTION (B-B)

BILL OF MATERIAL (-W1-)					
BAR	NO.	SIZE	TYPE	LENGTH	WEIGHT
H1	6	#4	6	5'-9"	23
H2	6	#4	6	7'-5"	30
V1	10	#4	STR	3'-10"	26
REINFORCING STEEL (FOR -W1-)					79 LBS.

NOTE: WINGWALL CLASS A CONCRETE QUANTITIES INCLUDED IN END BENT QUANTITIES.

BAR TYPES

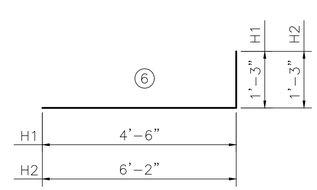

BILL OF MATERIAL (-W2-)					
BAR	NO.	SIZE	TYPE	LENGTH	WEIGHT
H1	6	#4	6	5'-9"	23
H2	6	#4	6	7'-5"	30
V1	10	#4	STR	3'-10"	26
REINFORCING STEEL (FOR -W2-)					79 LBS.

NOTE: WINGWALL CLASS A CONCRETE QUANTITIES INCLUDED IN END BENT QUANTITIES.

BAR TYPES

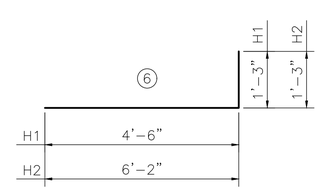

Aretè ENGINEERS
ARETÉ ENGINEERS, PLLC
7668 Valley Blvd.
P.O. Box 745
Blowing Rock, NC 28605
FIRM LICENSE No. P-1357

NORTH CAROLINA PROFESSIONAL SEAL 057706 ENGINEER WILL HOLLIFIELD

Will Hollifield
03/24/25

BOONE GORGES SECTION BRIDGE ABUTMENT
FOR
INTERFACE ENVIRONMENTAL CONSULTING, LLC
AT
LAT: 36.188495, LONG: -81.656035

DATE	3/26/25
DRAWN BY	DAT
CHECK BY	WMH
APPROVED BY	AGF
PROJECT NO.	3676

SHEET CONTENTS

WINGWALL -W1- & -W2-

REVISIONS:

SHEET NO.

S-9

TOTAL SHEETS

10

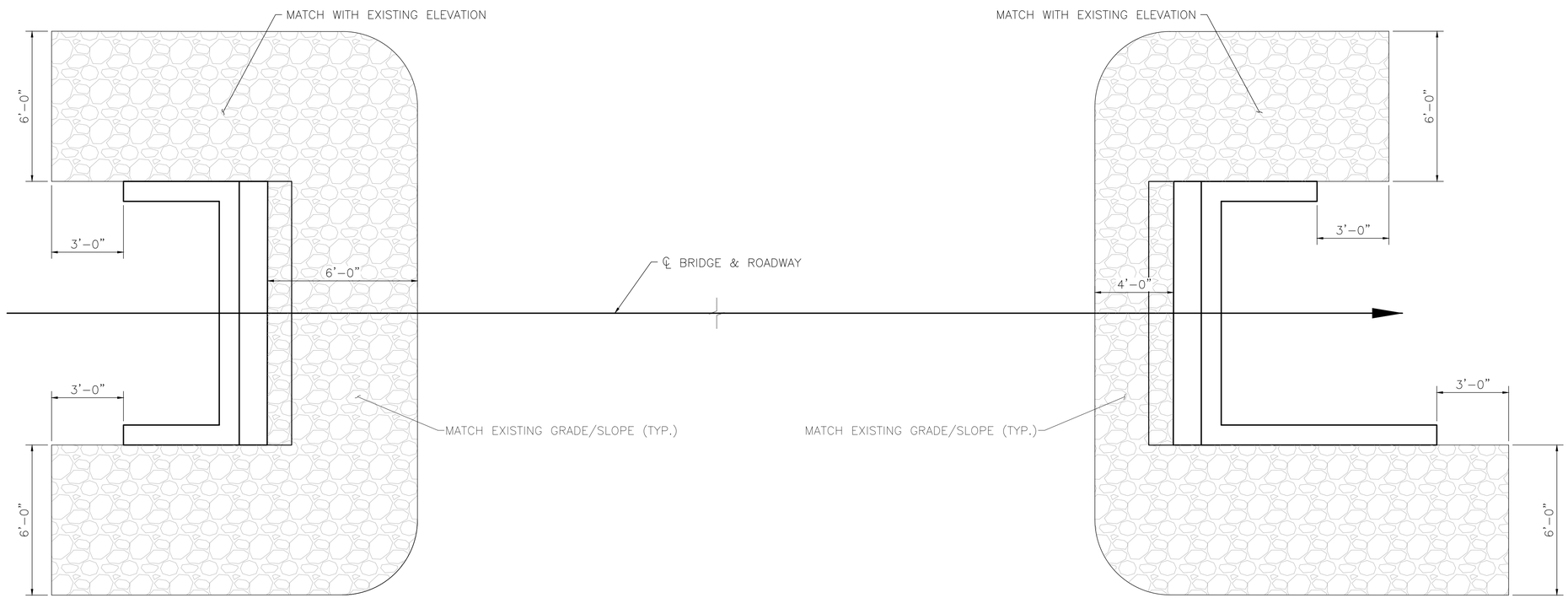

END BENT 1

END BENT 2

PLAN

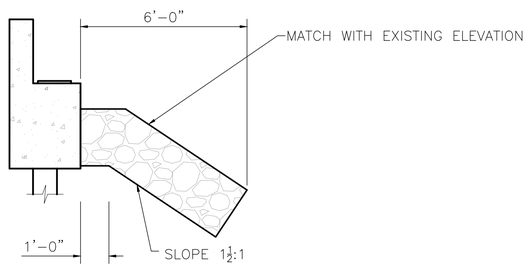

℄ SECTION BERM RIP RAPPED (END BENT 1)

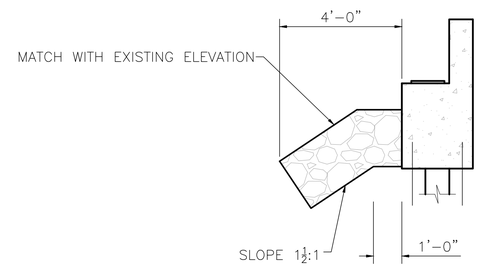

℄ SECTION BERM RIP RAPPED (END BENT 2)

Aretè ENGINEERS
ARETÉ ENGINEERS, PLLC
7668 Valley Blvd.
P.O. Box 745
Blowing Rock, NC 28605
FIRM LICENSE No. P-1357

NORTH CAROLINA PROFESSIONAL SEAL 057706 ENGINEER WILL HOLLIFIELD

Will Hollifield
03/24/25

BOONE GORGES SECTION BRIDGE ABUTMENT
FOR
INTERFACE ENVIRONMENTAL CONSULTING, LLC
AT
LAT: 36.188495, LONG: -81.656035

DATE	3/26/25
DRAWN BY	DAT
CHECK BY	WMH
APPROVED BY	AGF
PROJECT NO.	3676

SHEET CONTENTS

RIP-RAP DETAILS

REVISIONS:

SHEET NO.

S-10

TOTAL SHEETS

10

ABBREVIATIONS	
A	AREA
AASHTO	AMERICAN ASSOCIATION OF STATE HIGHWAY AND TRANSPORTATION OFFICIALS
ADH.	ADHESIVE
AGG.	AGGREGATE
AISC	AMERICAN INSTITUTE OF STEEL CONSTRUCTION
ALT.	ALTERNATE
ANSI	AMERICAN NATIONAL STANDARDS INSTITUTE
APPRH.	APPROACH
APPROX.	APPROXIMATE
ASTM	AMERICAN SOCIETY FOR TESTING MATERIALS
BGS	BELOW GROUND SURFACE
BOT.	BOTTOM
BRG.	BEARING
CTS.	CENTERS
CIPL	CAST IN PLACE
C/L	CENTERLINE
CON.	CONNECTION
CONC.	CONCRETE
COORD.	COORDINATE
DGN.	DESIGN
DIM.	DIMENSION
DWG.	DRAWING
EA.	EACH
EL.	ELEVATION
ENGR.	ENGINEER
EXIST.	EXISTING
F TO F	FACE TO FACE
FDN.	FOUNDATION
FT.	FEET
GALV.	GALVANIZED
GR.	GRADE
HORIZ.	HORIZONTAL
IN.	INCH
LB.	POUND
LONG.	LONGITUDINAL
MAX.	MAXIMUM
MIN.	MINIMUM
O/C	ON CENTER
OD	OUTSIDE DIAMETER
PAR.	PARALLEL
PVC	POLYVINYL CHLORIDE
REINF.	REINFORCEMENT
SCH.	SCHEDULE
STD.	STANDARD
STL.	STEEL
STR.	STRUCTURE
W.W.F.	WELDED WIRE FABRIC

SHEET INDEX	
S1	COVER SHEET
S2	STANDARD NOTES
S3	BRIDGE PLAN & ELEVATION
S4	BRIDGE CROSS SECTION
S5	END BENT 1
S6	END BENT 2
S7	WINGWALL -W1- & -W2-
S8	WINGWALL -W3- & -W4-
S9	RIP RAP

ARETÉ ENGINEERS

MIDDLEFORK GREENWAY – BOONE GORGE PARK

BRIDGE 2 (DOWNSTREAM BRIDGE) ABUTMENT DESIGN

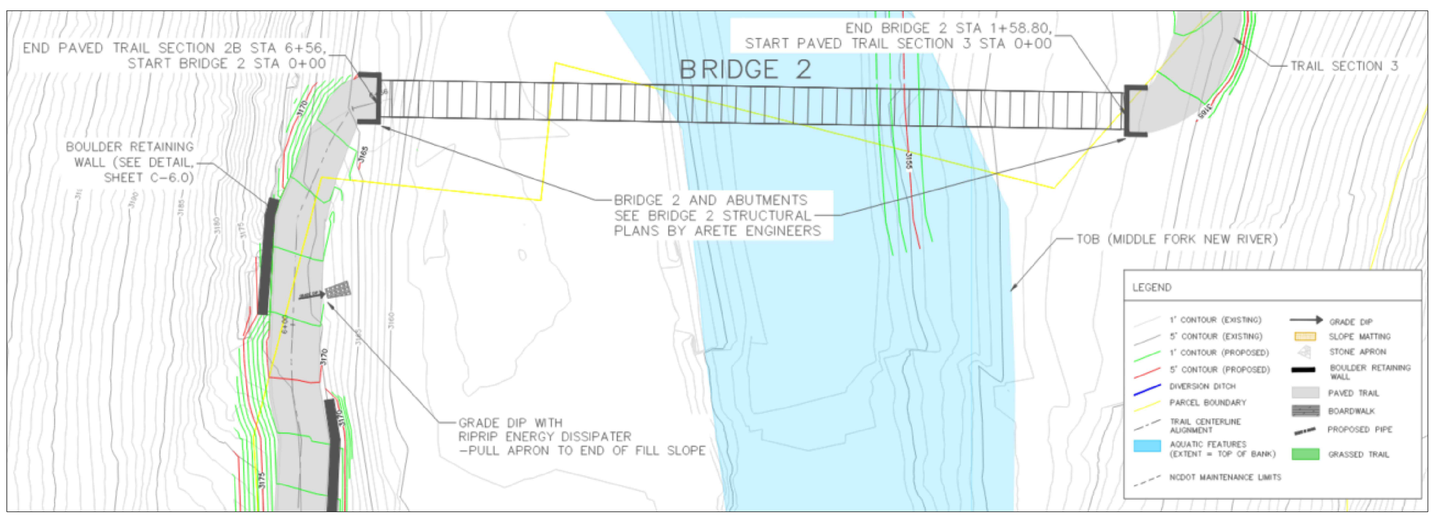

Areté ENGINEERS
ARETÉ ENGINEERS, PLLC
7668 Valley Blvd.
P.O. Box 745
Blowing Rock, NC 28605
FIRM LICENSE No. P-1357

NORTH CAROLINA PROFESSIONAL SEAL 057706 ENGINEER WILL HOLLIFIELD

Will Hollifield
03/26/25

BOONE GORGES SECTION BRIDGE ABUTMENT
FOR
INTERFACE ENVIRONMENTAL CONSULTING, LLC
AT
LAT: 36.186535, LONG: -81.653645

DATE	3/26/25
DRAWN BY	DAT
CHECK BY	WMH
APPROVED BY	AGF
PROJECT NO.	3676

SHEET CONTENTS

COVER SHEET

REVISIONS:

SHEET NO.

S-1

TOTAL SHEETS

9

DESIGN DATA:

SPECIFICATIONS - - - - - - - - A.A.S.H.T.O. GUIDE SPECIFICATIONS FOR DESIGN OF FRP PEDESTRIAN BIRDGES, 2ND EDITION

A.A.S.H.T.O. LRFD BRIDGE DESIGN SPECIFICATIONS

LIVE LOAD ---------- 90 PSF
IMPACT ALLOWANCE ---------- SEE A.A.S.H.T.O.
STRESS IN EXTREME FIBER OF
STRUCTURAL STEEL - ASSHTO M270 GRADE 26 -------- 36,000 LBS. PER SQ. IN.
- AASHTO M270 GRADE 50W ------- 50,000 LBS. PER SQ. IN
- AASHTO M270 GRADE 50 -------- 50,000 LBS. PER SQ. IN.
REINFORCING STEEL IN TENSION - GRADE 60 ----------60,000 LBS. PER SQ. IN.
CONCRETE IN COMPRESSION ----------3,000 LBS. PER SQ. IN.
CONCRETE IN SHEAR ----------SEE A.A.S.H.T.O.
STRUCTURAL TIMBER - TREATED OR UNTREATED ---------- 1,800 LBS. PER SQ. IN.
EXTREME FIBER STRESS
COMPRESSION PERPENDICULAR TO GRAIN OF ---------- 375 LBS. PER SQ. IN.
OF TIMBER
EQUIVALENT FLUID PRESSURE OF EARTH ---------- 60 LBS. PER CU. FT. (MIN.)

MATERIAL AND WORKMANSHIP:

EXCEPT AS MAY OTHERWISE BE SPECIFIED ON PLANS OR IN THE SPECIAL PROVISIONS. ALL MATERIAL AND WORKMANSHIP SHALL BE IN ACCORDANCE WITH THE 2018 "STANDARD SPECIFICATIONS FOR ROADS AND STRUCTURES" OF THE N.C. DEPARTMENT OF TRANSPORTATION.

CONCRETE:

UNLESS OTHERWISE REQUIRED ON PLANS, CLASS A CONCRETE SHALL BE USED FOR ALL PORTIONS OF ALL STRUCTURES WITH THE EXCEPTION THAT: CLASS AA CONCRETE SHALL BE USED IN BRIDGE SUPERSTRUCTURES, ABUTMENT BACKWALLS, AND APPROACH SLABS: AND CLASS B CONCRETE SHALL BE USED FOR SLOPE PROTECTION AND RIP RAP. CONCRETE SHALL BE CURED IN COMPLIANCE WITH NCDOT SPECIFICATIONS.

CONCRETE CHAMFERS:

UNLESS OTHERWISE NOTED ON THE PLANS, ALL EXPOSED CORNERS ON STRUCTURES SHALL BE CHAMFERED 3/4" WITH THE FOLLOWING EXCEPTIONS: TOP CORNERS OF CURBS MAY BE ROUNDED TO 1-1/2" RADIUS WHICH IS BUILT INTO CURB FORMS; CORNERS OF TRANSVERSE FLOOR EXPANSION JOINTS SHALL BE ROUNDED WITH A 1/4" FINISHING TOOL UNLESS OTHERWISE REQUIRED ON PLANS; AND CORNERS OF EXPANSION JOINTS IN THE ROADWAY FACES AND TOPS OF CURBS AND SIDEWALKS SHALL BE ROUNDED TO A 1/4" RADIUS WITH A FINISHING STONE OR TOOL UNLESS OTHERWISE REQUIRED ON PLANS.

DOWELS:

DOWELS, UNLESS OTHERWISE NOTES, SHALL BE EMBEDDED A MINIMUM OF 6" INTO EXISTING CONCRETE AND GROUTED INTO PLACE WITH 1:2 CEMENT MORTAR.

ALLOWANCE FOR DEAD LOAD DEFLECTION, SETTLEMENT, ETC. IN CASTING SUPERSTRUCTURES:

BRIDGES SHALL BE BUILT ON THE GRADE OR VERTICAL CURVE SHOWN ON PLANS. SLABS,CURBS, AND PARAPETS SHALL CONFORM TO THE GRADE OR CURVE.

ALL DIMENSIONS WHICH ARE GIVEN IN SECTION AND ARE AFFECTED BY DEAD LOAD DEFLECTIONS ARE DIMENSIONS AT CENTER LINE OF BEARING UNLESS OTHERWISE NOTED ON THE PLANS. IN SETTING FORMS FOR STEEL BEAM BRIDGES AND PRESTRESSED CONCRETE GIRDER BRIDGES, ADJUSTMENTS SHALL BE MADE DUE TO THE DEAD LOAD DEFLECTIONS FOR THE ELEVATIONS SHOWN. WHERE BLOCKS ARE SHOWN OVER BEAMS FOR BUILDING UP TO THE SLAB, THE VERTICAL DIMENSIONS OF THE BLOCKS SHALL BE ADJUSTED BETWEEN BEARING TO COMPENSATE FOR DEAD LOAD DEFLECTIONS, VERTICAL CURVE ORDINATE, AND ACTUAL BEAM CHAMBER. WHERE BOTTOM OF SLAB IS IN LINE WITH BOTTOM OF TOP FLANGES, DEPTH OF SLAB BETWEEN BEARINGS SHALL BE ADJUSTED TO COMPENSATE FOR DEAD LOAD DEFLECTION, VERTICAL CURVE ORDINATE, AND ACTUAL BEAM CHAMBER.

IN SETTING FALSEWORK AND FORMS FOR REINFORCED CONCRETE SPANS, AN ALLOWANCE SHALL BE MADE FOR DEAD LOAD DEFLECTIONS, SETTLEMENT OF FALSEWORK, AND PERMANENT CHAMBER WHICH SHALL BE PROVIDED FOR IN ADDITION TO THE ELEVATIONS SHOWN. AFTER REMOVAL OF THE FALSEWORK, THE FINISHED STRUCTURES SHALL CONFORM TO THE PROFILE AND ELEVATIONS SHOWN ON THE PLANS AND CONSTRUCTION ELEVATIONS FURNISHED BY THE ENGINEER.

DETAILED DRAWINGS FOR FALSEWORK OR FORMS FOR BRIDGE SUPERSTRUCTURE AND ANY STRUCTURE OR PARTS OF A STRUCTURE AS NOTED ON THE PLANS SHALL BE SUBMITTED TO THE ENGINEER FOR APPROVAL BEFORE CONSTRUCTION OF THE FALSEWORK OR FORMS IS STARTED.

REINFORCING STEEL:

ALL REINFORCING STEEL SHALL BE DEFORMED. DIMENSIONS RELATIVE TO PLACEMENT OF REINFORCING ARE TO CENTERS OF BARS UNLESS OTHERWISE INDICATED IN THE PLANS. DIMENSIONS ON BAR DETAILS ARE TO CENTERS OF BARS OR ARE OUT TO OUT AS INDICATED ON PLANS.

WIRE BAR SUPPORTS SHALL BE PROVIDED FOR REINFORCING STEEL WHERE INDICATED ON THE PLANS. WHEN BAR SUPPORT PIECES ARE PLACE IN CONTINUOUS LINES, THEY SHALL BE SO PLACED THAT THE ENDS OF THE SUPPORTING WIRES SHALL BE LAPPED TO LOCK LEGS ON ADJOINING PIECES.

LAP SPLICES SHALL BE A MINIMUM LENGTH OF 40X DIAMETER OF BAR.

SPECIAL NOTES:

GENERALLY, IN CASE OF DISCREPANCY, THIS STANDARD SHEET OF NOTES SHALL GOVERN OVER THE SPECIFICATIONS, BUT THE REMAINDER OF THE PLANS SHALL GOVERN OVER NOTES HEREON, AND SPECIAL PROVISIONS SHALL GOVERN OVER ALL.

CONSTRUCTION SEQUENCE:

PLACE BACKFILL IN ACCORDANCE WITH NCDOT SPECIFICATIONS. PLACE BACKFILL ABOVE THE BEARING SEAT AFTER THE PREFABRICATED FRP BRIDGE IS SET ON THE END BENTS.

PILE SPECIFICATIONS

H-PILES SHALL BE 50 KSI STEEL. A MINIMUM OF 1 PRODUCTION PILE SHALL BE TESTED AT EACH END BENT.

Areté ENGINEERS
ARETÉ ENGINEERS, PLLC
7668 Valley Blvd.
P.O. Box 745
Blowing Rock, NC 28605
FIRM LICENSE No. P-1357

NORTH CAROLINA PROFESSIONAL SEAL 057706 ENGINEER WILL HOLLIFIELD

Will Hollifield
03/24/25

BOONE GORGES SECTION BRIDGE ABUTMENT
FOR
INTERFACE ENVIRONMENTAL CONSULTING, LLC
AT
LAT: 36.186535, LONG: -81.653645

DATE	3/26/25
DRAWN BY	DAT
CHECK BY	WMH
APPROVED BY	AGF
PROJECT NO.	3676

SHEET CONTENTS

STANDARD NOTES

REVISIONS:

SHEET NO.

S-2

TOTAL SHEETS

9

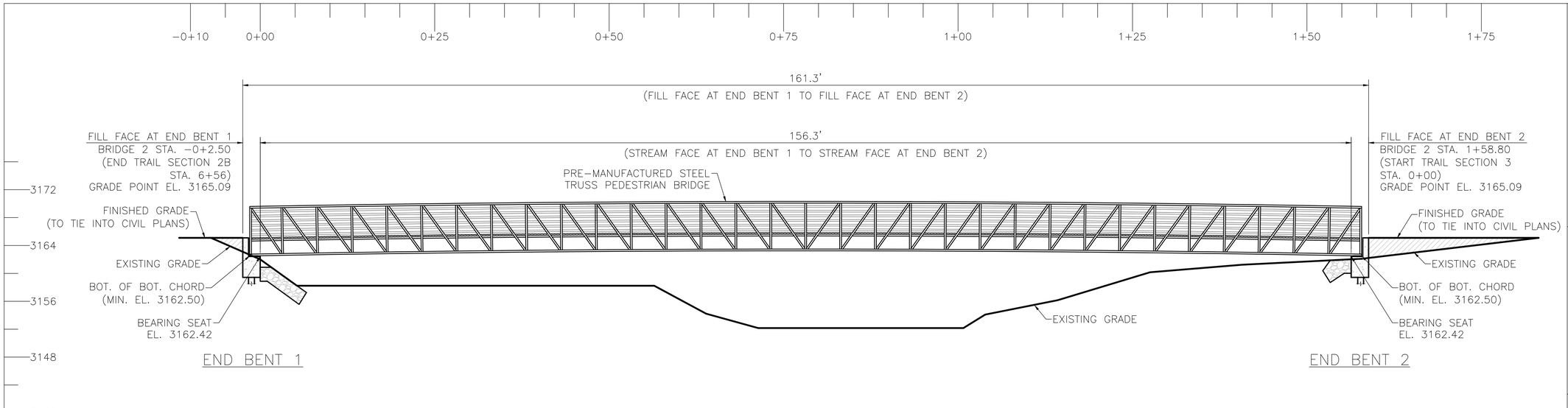

SECTION ALONG CENTERLINE OF BRIDGE

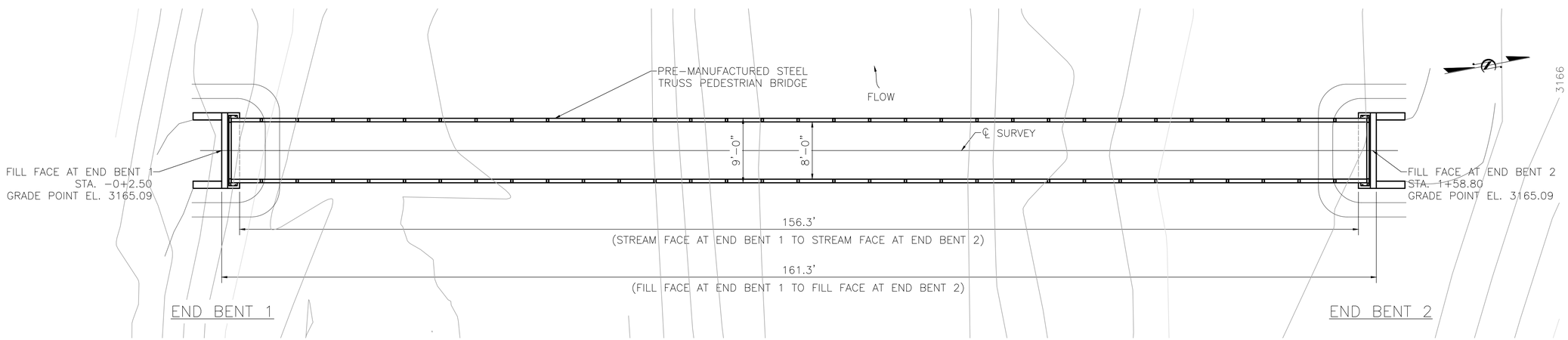

PLAN VIEW

FOUNDATION NOTES:

1. FOR PILES, SEE PILES CONSTRUCTION SPECIFICATIONS.
2. PILES AT END BENT 1 AND END BENT 2 ARE DESIGNED FOR AN ALLOWABLE PILE CAPACITY OF 25 TONS.
3. PILES AT END BENT 1 AND END BENT 2 ARE DESIGNED FOR AN ULTIMATE PILE CAPACITY OF 50 TONS.
4. STEEL PILE POINTS ARE REQUIRED FOR DRIVEN PILES AT END BENT 2.
5. IT HAS BEEN ESTIMATED THAT A PILE DRIVING HAMMER WITH AN EQUIVALENT RATED ENERGY IN THE RANGE OF 5,000 FT-LBS TO 15,000 FT-LBS PER BLOW WILL BE REQUIRED TO DRIVE PILES AT END BENT 2. THIS ESTIMATED ENERGY RANGE DOES NOT RELEASE THE CONTRACTOR FROM PROVIDING DRIVING EQUIPMENT IN ACCORDANCE WITH THE PILES CONSTRUCTION SPECIFICATIONS.
6. VERTICAL DRILLED-IN PILES MAY BE UTILIZED IN LIEU OF VERTICAL DRIVEN PILES FOR END BENT 1 AND ARE REQUIRED FOR END BENT 1. EXCAVATE HOLES AT PILE LOCATIONS WITH A MINIMUM PENETRATION OF 3 FEET INTO WEATHERED ROCK AND/OR ROCK AND AT LEAST 10 FEET BELOW THE BOTTOM OF THE CAP. FOR PILE EXCAVATIONS SEE PILE CONSTRUCTION SPECIFICATIONS.
7. CONCRETE IS REQUIRED TO FILL HOLES FOR PILE EXCAVATION AT END BENT 1 AND END BENT 2.
8. END BENT SLOPES SHALL BE COVERED WITH RIP RAP SLOPE PROTECTION FROM THE TOE OF SLOPE TO BERM TO PROTECT APPROACH EMBANKMENT FROM SCOUR.
9. NO WAITING PERIOD IS REQUIRED BEFORE BEGINNING END BENT CONSTRUCTION.

DRILLED-IN PILE INFORMATION

ALLOWABLE PILE CAPACITY: 25 TONS (50 KIPS)	END BENT 1	END BENT 2
ESTIMATED PILE EMBEDMENT INTO CAP (FT)	1	1
ESTIMATED PENETRATION INTO PWR/BEDROCK (FT)	4.5	3.0
ESTIMATED PILE PENETRATION, BGS (FT)	10.0	16.5
ESTIMATED PILE LENGTH (FT) PER PILE	11.0	17.5
AVERAGE PILE LENGTH (FT) PER PILE	15	20

Areté ENGINEERS
ARETÉ ENGINEERS, PLLC
7668 Valley Blvd.
P.O. Box 745
Blowing Rock, NC 28605
FIRM LICENSE No. P-1357

NORTH CAROLINA PROFESSIONAL SEAL 057706 ENGINEER WILL HOLLIFIELD

Will Hollifield
03/24/25

BOONE GORGES SECTION BRIDGE ABUTMENT
FOR
INTERFACE ENVIRONMENTAL CONSULTING, LLC
AT
LAT: 36.186535, LONG: -81.653645

DATE	3/26/25
DRAWN BY	DAT
CHECK BY	WMH
APPROVED BY	AGF
PROJECT NO.	3676

SHEET CONTENTS

ELEVATION & PLAN ALONG CENTERLINE OF BRIDGE

REVISIONS:

SHEET NO.

S-3

TOTAL SHEETS

9

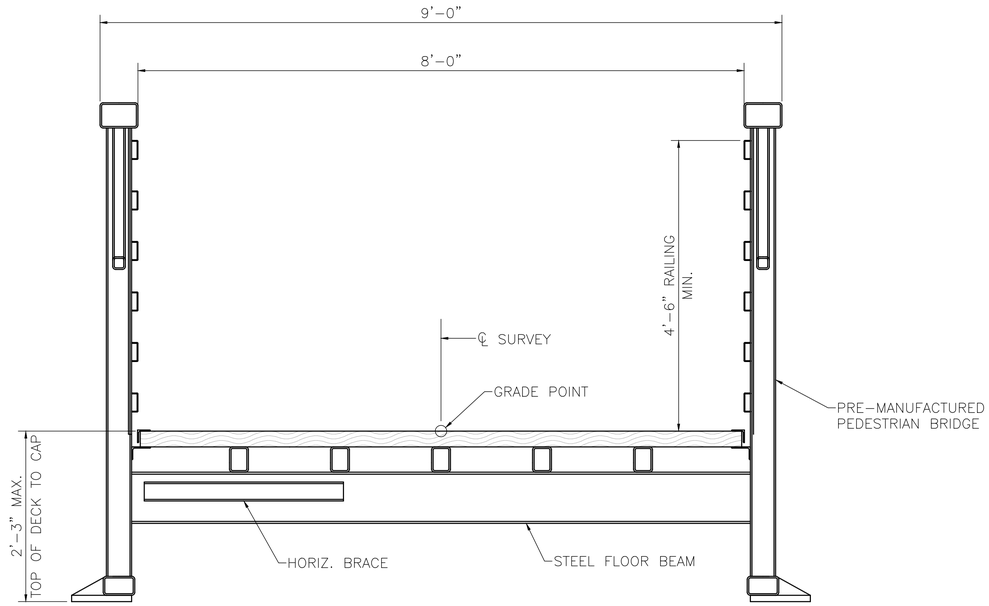

TYPICAL SECTION (PRE-MANUFACTURED BRIDGE)

BEGIN STATION	END STATION	BRIDGE LENGTH
-0+2.50	1+58.80	159.3'

DISTANCE FROM BEGIN STATION TO END STATION INCLUDES 10" BACKWALL AND 2" EXP. JT. AT EACH END*

PRE-MANUFACTURED PEDESTRIAN BRIDGE NOTES

1. BRIDGE LOADING & GEOMETRY IS ESTIMATED. AFTER SHOP DRAWINGS FOR THE PREMANUFACTURED PEDESTRIAN BRIDGE ARE SUBMITTED, CONSTRUCTION ADMINISTRATOR SHALL FORWARD SHOP DRAWINGS TO ARETE ENGINEERS FOR VERIFICATION THAT THE SUBSTRUCTURE CAN SUPPORT CALCULATED BRIDGE LOADS.
2. PRE-MANUFACTURED PEDESTRIAN BRIDGE DESIGNED PER AASHTO LRFD GUIDE SPECIFICATIONS FOR DESIGN OF PEDESTRIAN BRIDGES (LATEST EDITION).
3. THIS BRIDGE IS LOCATED IN SEISMIC ZONE 1.
4. FABRICATOR OF PREMANUFACTURED PEDESTRIAN BRIDGE SHALL INDICATE THE LOCATION OF DRAINAGE HOLES FOR THE BRIDGE TUBULAR MEMBERS IN THE SHOP DRAWINGS.

Areté ENGINEERS
ARETÉ ENGINEERS, PLLC
7668 Valley Blvd.
P.O. Box 745
Blowing Rock, NC 28605
FIRM LICENSE No. P-1357

NORTH CAROLINA PROFESSIONAL SEAL 057706 ENGINEER WILL HOLLIFIELD
Will Hollifield
03/24/25

BOONE GORGES SECTION BRIDGE ABUTMENT
FOR
INTERFACE ENVIRONMENTAL CONSULTING, LLC
AT
LAT: 36.186535, LONG: -81.653645

DATE	3/26/25
DRAWN BY	DAT
CHECK BY	WMH
APPROVED BY	AGF
PROJECT NO.	3676

SHEET CONTENTS

TYPICAL SECTION OF PRE-MANUFACTURED BRIDGE 1

REVISIONS:

SHEET NO.

S-4

TOTAL SHEETS

9

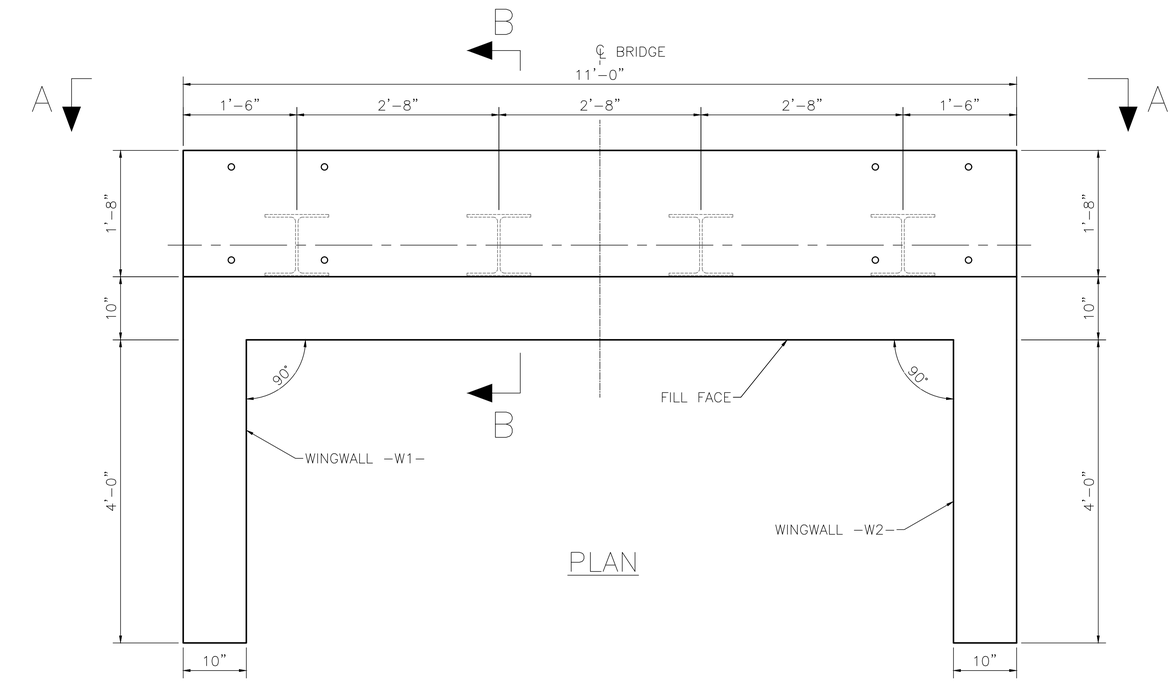

PLAN

NOTE:

DIMENSIONS MARKED WITH AN ASTERISK (*) ARE TO BE ADJUSTED BY ARETÉ ENGINEERS AFTER PREMANUFACTURED BRIDGE IS DESIGNED. DIMENSIONS, CONCRETE, & REINFORCING STEEL QUANTITIES ARE SUBJECT TO CHANGE UNTIL AFTER SHOP DRAWINGS ARE REVIEWED AND APPROVED.

UPON RECEIPT OF BRIDGE SHOP DRAWINGS, CONSTRUCTION ADMINISTRATOR SHALL FOREWARD DRAWINGS TO ARETÉ ENGINEERS AFTER WHICH ARETÉ WILL ISSUE UPDATED BRIDGE PLANS.

1. STEEL PILES AND CAP BEAM, USE HP12X53, ASTM A 572 GR. 50 OR APPROVED EQUIVALENT.

2. IF FIELD CONDITIONS DIFFER FROM PLAN DESIGN, IMMEDIATELY NOTIFY ENGINEER.

BILL OF MATERIAL (END BENT 1)

BAR	NO.	SIZE	TYPE	LENGTH	WEIGHT
B1	8	#6	1	11'-10"	142
B2	18	#4	STR	10'-8"	128
B3	12	#4	STR	4'-1"	33
B4	3	#4	STR	2'-2"	4
S1	13	#4	2	2'-11"	25
S2	13	#4	3	8'-1"	70
S3	12	#4	4	6'-6"	52
L1	12	#4	5	2'-11"	23

REINFORCING STEEL (FOR END BENT 1) 477 LBS.

CLASS A CONCRETE BREAKDOWN (FOR END BENT 1)

POUR #1 (CAP & LOWER WINGS)	3.80 C.Y.
POUR #2 (BACKWALL & UPPER WINGS)	1.56 C.Y.
TOTAL CLASS A CONCRETE	5.36 C.Y.

Areté ENGINEERS
ARETÉ ENGINEERS, PLLC
7668 Valley Blvd.
P.O. Box 745
Blowing Rock, NC 28605
FIRM LICENSE No. P-1357

NORTH CAROLINA PROFESSIONAL SEAL 057706 ENGINEER WILL HOLLIFIELD

Will Hollifield
03/24/25

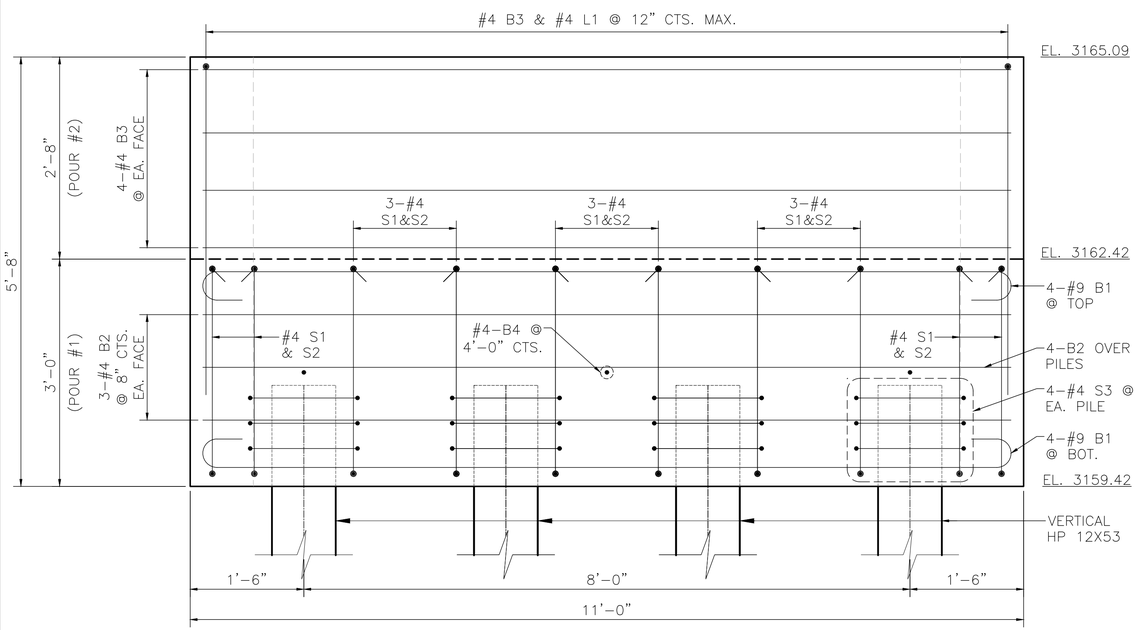

ELEVATION (A-A)

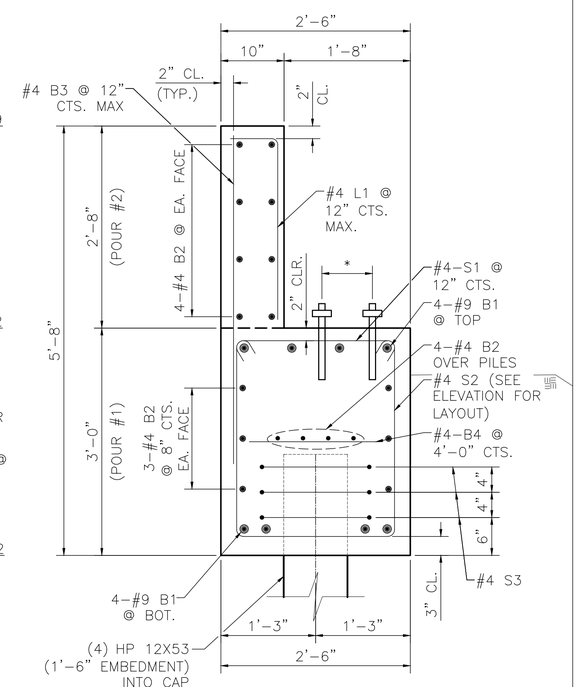

SECTION (B-B)

SEE S-8 FOR ABUTMENT DRAINAGE DETAIL

BAR TYPES

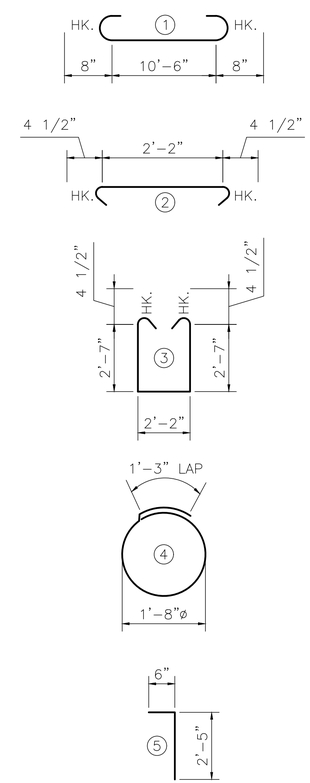

BOONE GORGES SECTION BRIDGE ABUTMENT
FOR
INTERFACE ENVIRONMENTAL CONSULTING, LLC
AT
LAT: 36.186535, LONG: -81.653645

DATE	3/26/25
DRAWN BY	DAT
CHECK BY	WMH
APPROVED BY	AGF
PROJECT NO.	3676

SHEET CONTENTS

END BENT 1 PLAN, ELEVATION, AND SECTION

REVISIONS:

SHEET NO.

S-5

TOTAL SHEETS

9

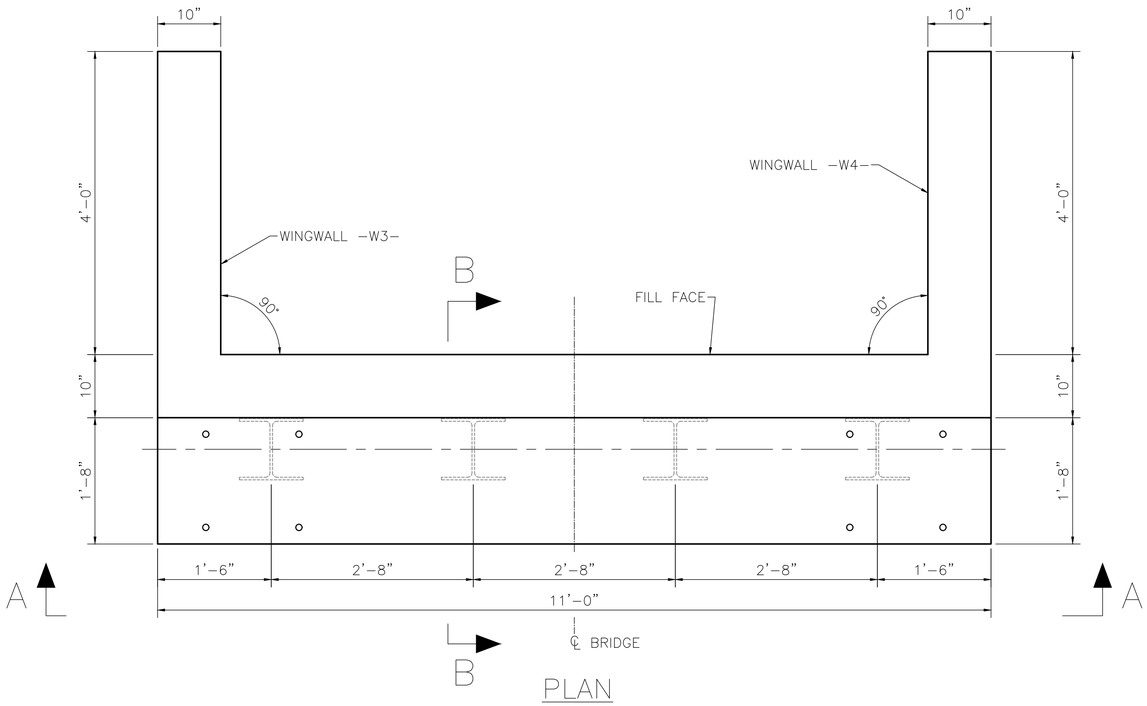

PLAN

NOTE:

DIMENSIONS MARKED WITH AN ASTERISK (*) ARE TO BE ADJUSTED BY ARETÉ ENGINEERS AFTER PREMANUFACTURED BRIDGE IS DESIGNED. DIMENSIONS, CONCRETE, & REINFORCING STEEL QUANTITIES ARE SUBJECT TO CHANGE UNTIL AFTER SHOP DRAWINGS ARE REVIEWED AND APPROVED.

UPON RECEIPT OF BRIDGE SHOP DRAWINGS, CONSTRUCTION ADMINISTRATOR SHALL FOREWARD DRAWINGS TO ARETÉ ENGINEERS AFTER WHICH ARETÉ WILL ISSUE UPDATED BRIDGE PLANS.

1. STEEL PILES AND CAP BEAM, USE HP12X53, ASTM A 572 GR. 50 OR APPROVED EQUIVALENT.

2. IF FIELD CONDITIONS DIFFER FROM PLAN DESIGN, IMMEDIATELY NOTIFY ENGINEER.

BILL OF MATERIAL (END BENT 2)

BAR	NO.	SIZE	TYPE	LENGTH	WEIGHT
B1	8	#6	1	11'-10"	142
B2	18	#4	STR	10'-8"	128
B3	12	#4	STR	4'-1"	33
B4	3	#4	STR	2'-2"	4
S1	13	#4	2	2'-11"	25
S2	13	#4	3	8'-1"	70
S3	12	#4	4	6'-6"	52
L1	12	#4	5	2'-11"	23

REINFORCING STEEL (FOR END BENT 2) 477 LBS.

CLASS A CONCRETE BREAKDOWN (FOR END BENT 2)

POUR #1 (CAP & LOWER WINGS)	3.80 C.Y.
POUR #2 (BACKWALL & UPPER WINGS)	1.56 C.Y.
TOTAL CLASS A CONCRETE	5.36 C.Y.

BAR TYPES

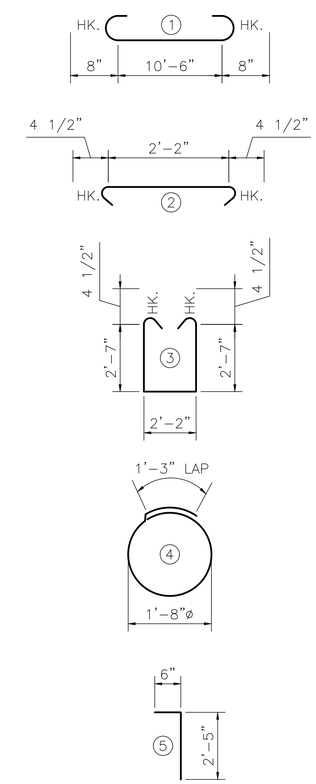

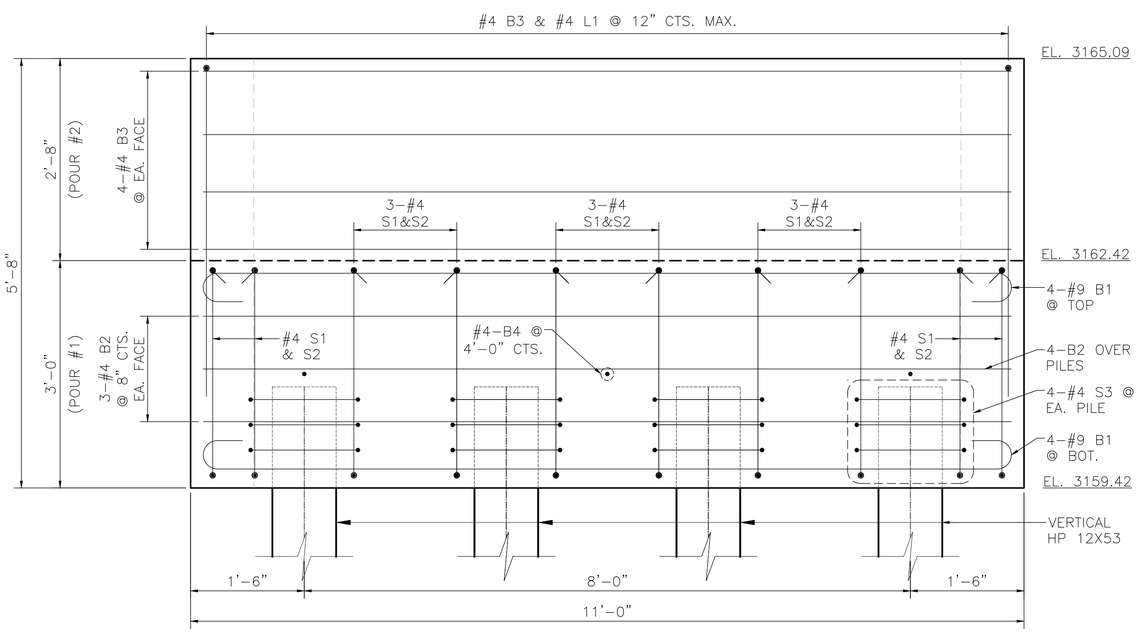

ELEVATION (A-A)

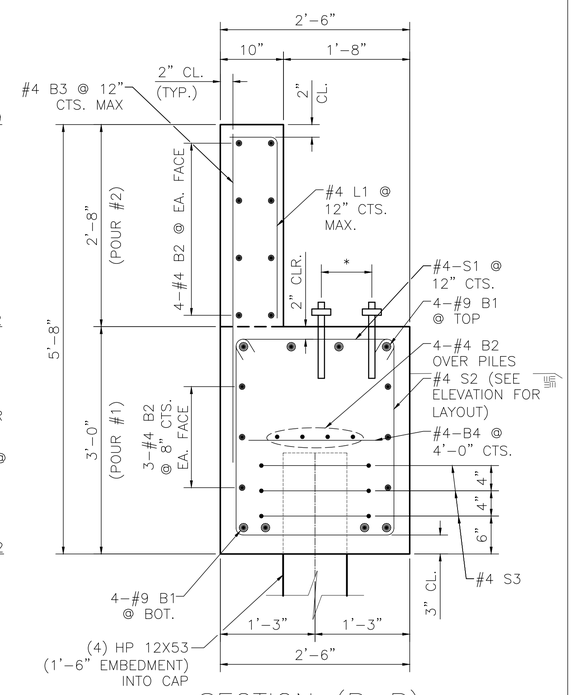

SECTION (B-B)

SEE S-8 FOR ABUTMENT DRAINAGE DETAIL

Areté ENGINEERS
ARETÉ ENGINEERS, PLLC
7668 Valley Blvd.
P.O. Box 745
Blowing Rock, NC 28605
FIRM LICENSE No. P-1357

NORTH CAROLINA PROFESSIONAL SEAL 057706 ENGINEER WILL HOLLIFIELD

Will Hollifield
03/24/25

BOONE GORGES SECTION BRIDGE ABUTMENT
FOR
INTERFACE ENVIRONMENTAL CONSULTING, LLC
AT
LAT: 36.186535, LONG: -81.653645

DATE	3/26/25
DRAWN BY	DAT
CHECK BY	WMH
APPROVED BY	AGF
PROJECT NO.	3676

SHEET CONTENTS

END BENT 2 PLAN, ELEVATION, AND SECTION

REVISIONS:

SHEET NO.

S-6

TOTAL SHEETS

9

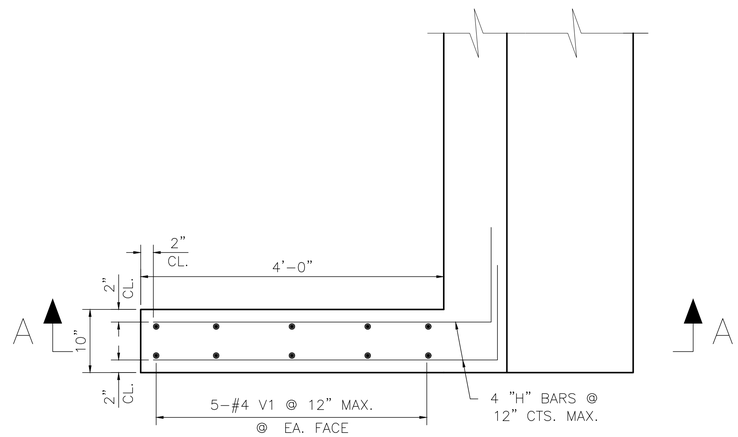

-W1, W2- PLAN

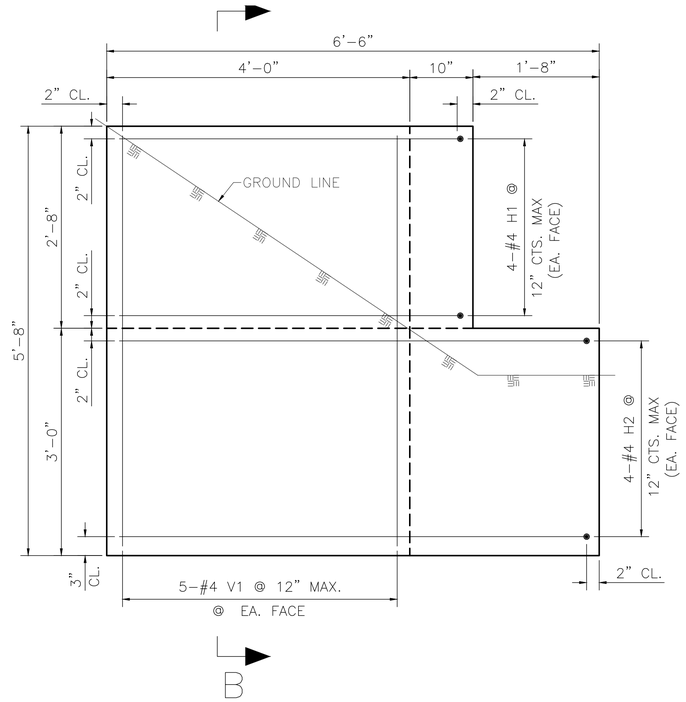

-W1, W2- ELEVATION (A-A)

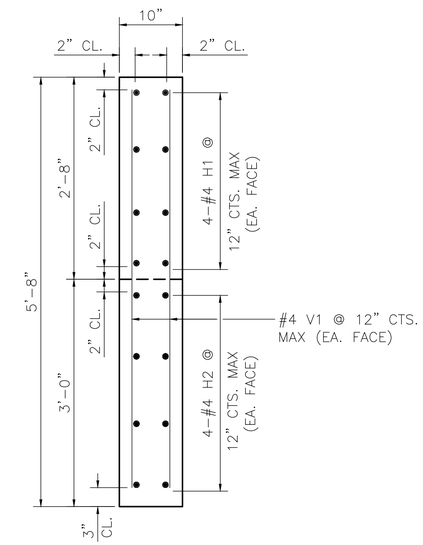

-W1, W2- SECTION (B-B)

BILL OF MATERIAL (-W1-)					
BAR	NO.	SIZE	TYPE	LENGTH	WEIGHT
H1	8	#4	6	5'-9"	31
H2	8	#4	6	7'-5"	40
V1	10	#4	STR	5'-3"	35
REINFORCING STEEL (FOR -W1-)					106 LBS.

NOTE: WINGWALL CLASS A CONCRETE QUANTITIES INCLUDED IN END BENT QUANTITIES.

BAR TYPES

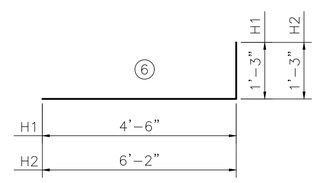

BILL OF MATERIAL (-W2-)					
BAR	NO.	SIZE	TYPE	LENGTH	WEIGHT
H1	8	#4	6	5'-9"	31
H2	8	#4	6	7'-5"	40
V1	10	#4	STR	5'-3"	35
REINFORCING STEEL (FOR -W2-)					106 LBS.

NOTE: WINGWALL CLASS A CONCRETE QUANTITIES INCLUDED IN END BENT QUANTITIES.

BAR TYPES

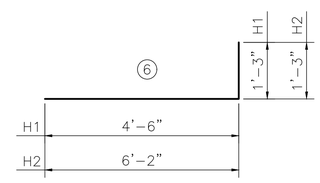

Aretè ENGINEERS
ARETÉ ENGINEERS, PLLC
7668 Valley Blvd.
P.O. Box 745
Blowing Rock, NC 28605
FIRM LICENSE No. P-1357

NORTH CAROLINA PROFESSIONAL SEAL 057706 ENGINEER WILL HOLLIFIELD

Will Hollifield
03/24/25

BOONE GORGES SECTION BRIDGE ABUTMENT
FOR
INTERFACE ENVIRONMENTAL CONSULTING, LLC
AT
LAT: 36.186535, LONG: -81.653645

DATE	3/26/25
DRAWN BY	DAT
CHECK BY	WMH
APPROVED BY	AGF
PROJECT NO.	3676

SHEET CONTENTS

WINGWALL -W1- & -W2-

REVISIONS:

SHEET NO.

S-7

TOTAL SHEETS

9

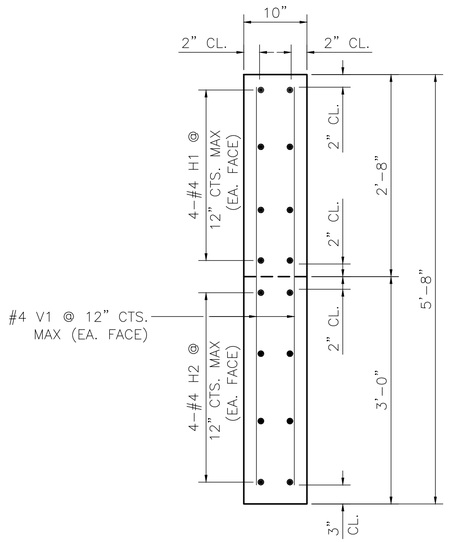

-W3, W4- SECTION (B-B)

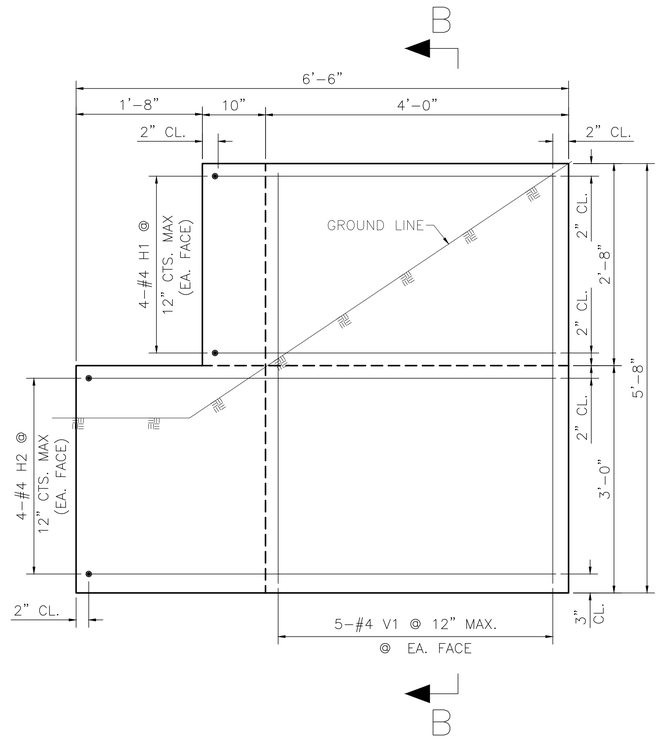

-W3, W4- ELEVATION (A-A)

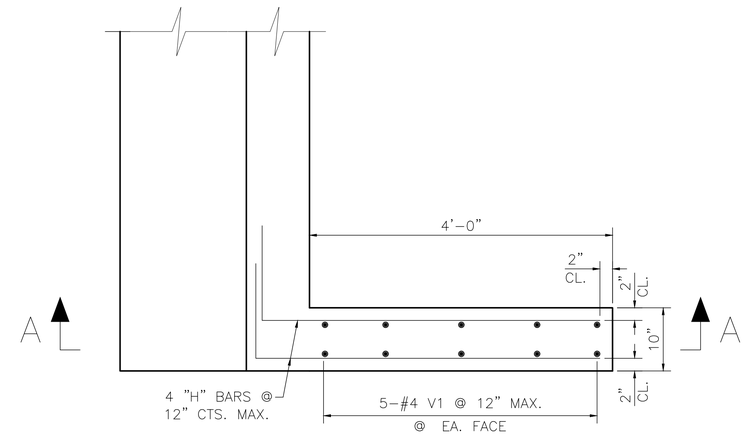

-W3, W4- PLAN

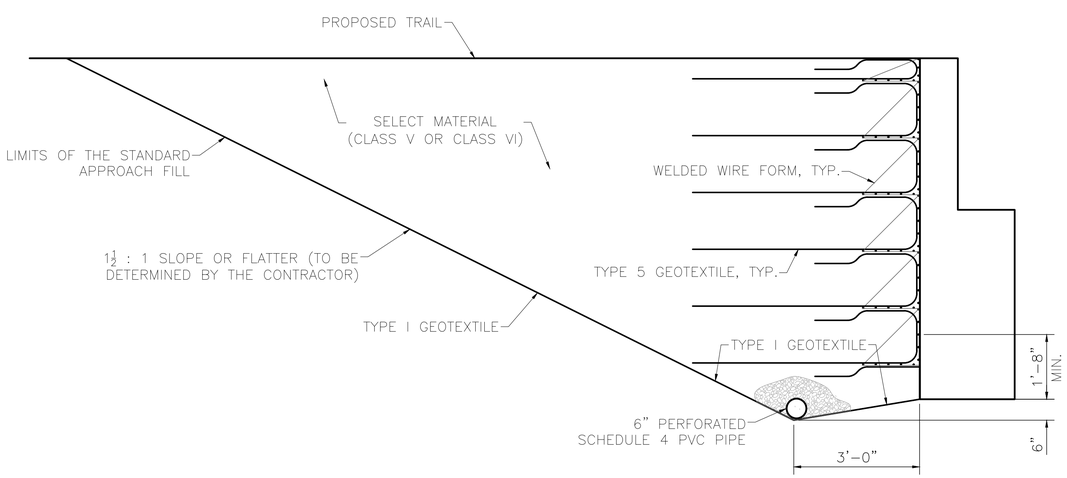

ABUTMENT DRAINAGE DETAIL

BILL OF MATERIAL (-W3-)

BAR	NO.	SIZE	TYPE	LENGTH	WEIGHT
H1	8	#4	6	5'-9"	31
H2	8	#4	6	7'-5"	40
V1	10	#4	STR	5'-3"	35
REINFORCING STEEL (FOR -W3-)					106 LBS.

NOTE: WINGWALL CLASS A CONCRETE QUANTITIES INCLUDED IN END BENT QUANTITIES.

BAR TYPES

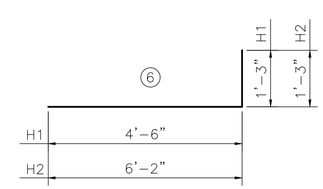

BILL OF MATERIAL (-W4-)

BAR	NO.	SIZE	TYPE	LENGTH	WEIGHT
H1	8	#4	6	5'-9"	31
H2	8	#4	6	7'-5"	40
V1	10	#4	STR	5'-3"	35
REINFORCING STEEL (FOR -W4-)					106 LBS.

NOTE: WINGWALL CLASS A CONCRETE QUANTITIES INCLUDED IN END BENT QUANTITIES.

BAR TYPES

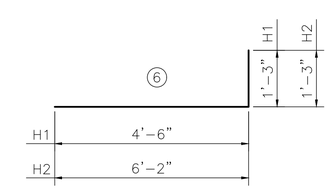

Areté ENGINEERS
ARETÉ ENGINEERS, PLLC
7668 Valley Blvd.
P.O. Box 745
Blowing Rock, NC 28605
FIRM LICENSE No. P-1357

NORTH CAROLINA PROFESSIONAL SEAL 057706 ENGINEER WILL HOLLIFIELD

Will Hollifield
03/24/25

BOONE GORGES SECTION BRIDGE ABUTMENT
FOR
INTERFACE ENVIRONMENTAL CONSULTING, LLC
AT
LAT: 36.186535, LONG: -81.653645

DATE	3/26/25
DRAWN BY	DAT
CHECK BY	WMH
APPROVED BY	AGF
PROJECT NO.	3676

SHEET CONTENTS

WINGWALL -W3-,-W4-

REVISIONS:

SHEET NO.

S-8

TOTAL SHEETS

9

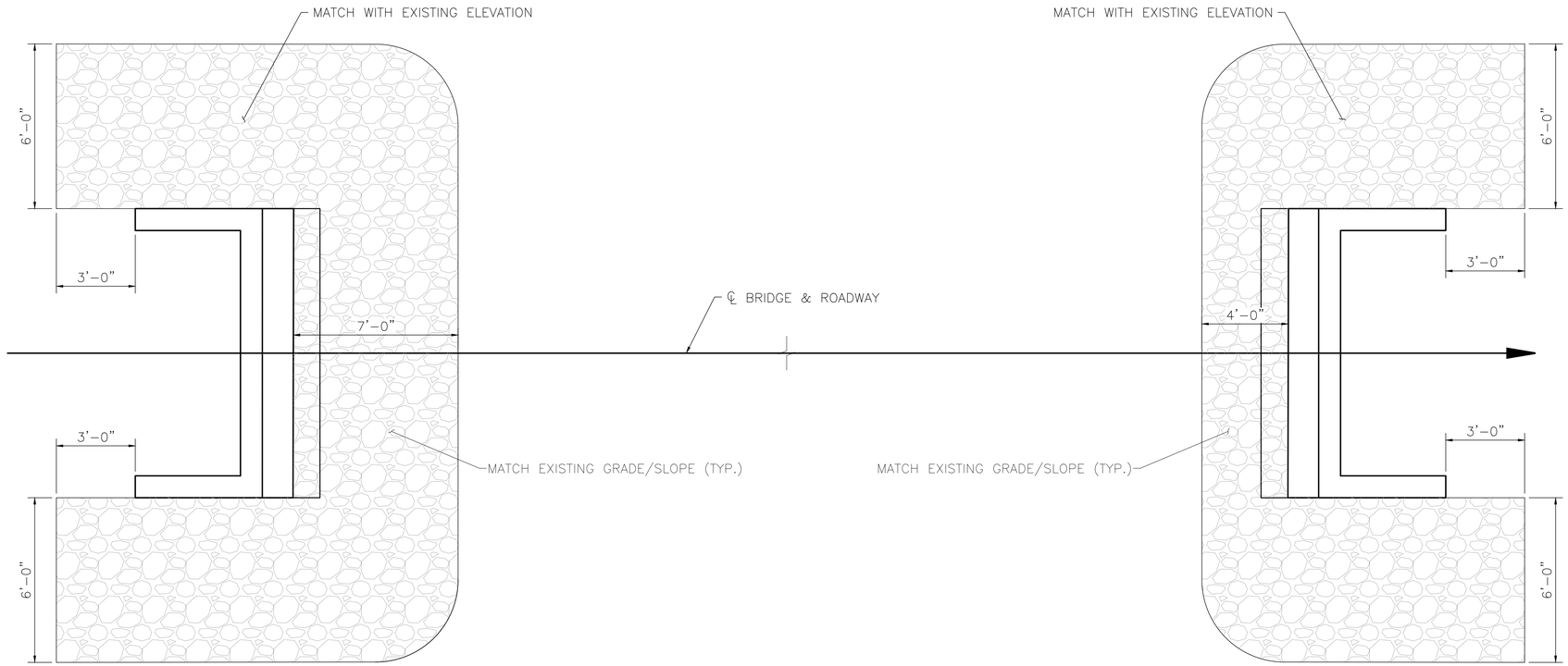

END BENT 1

END BENT 2

PLAN

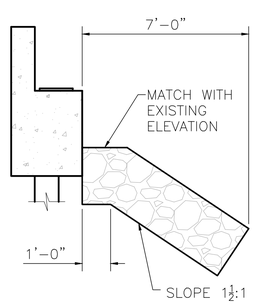

℄ SECTION BERM RIP RAPPED (END BENT 1)

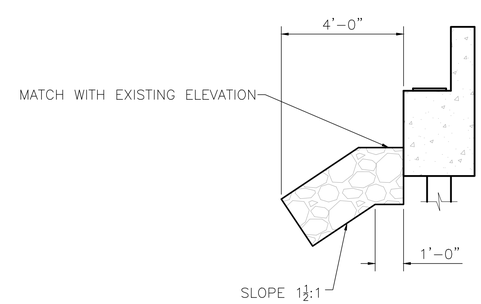

℄ SECTION BERM RIP RAPPED (END BENT 2)

Aretè ENGINEERS
ARETÉ ENGINEERS, PLLC
7668 Valley Blvd.
P.O. Box 745
Blowing Rock, NC 28605
FIRM LICENSE No. P-1357

NORTH CAROLINA PROFESSIONAL SEAL 057706 ENGINEER WILL HOLLIFIELD

Will Hollifield
03/24/25

BOONE GORGES SECTION BRIDGE ABUTMENT
FOR
INTERFACE ENVIRONMENTAL CONSULTING, LLC
AT
LAT: 36.186535, LONG: -81.653645

DATE	3/26/25
DRAWN BY	DAT
CHECK BY	WMH
APPROVED BY	AGF
PROJECT NO.	3676

SHEET CONTENTS

RIP-RAP DETAILS

REVISIONS:

SHEET NO.

S-9

TOTAL SHEETS

9

NEW RESTROOMS

BOONE GORGE PARK, BOONE, NC 28607

OWNER

BLUE RIDGE CONSERVANCY
416 AHO ROAD
BLOWING ROCK, NC 28605

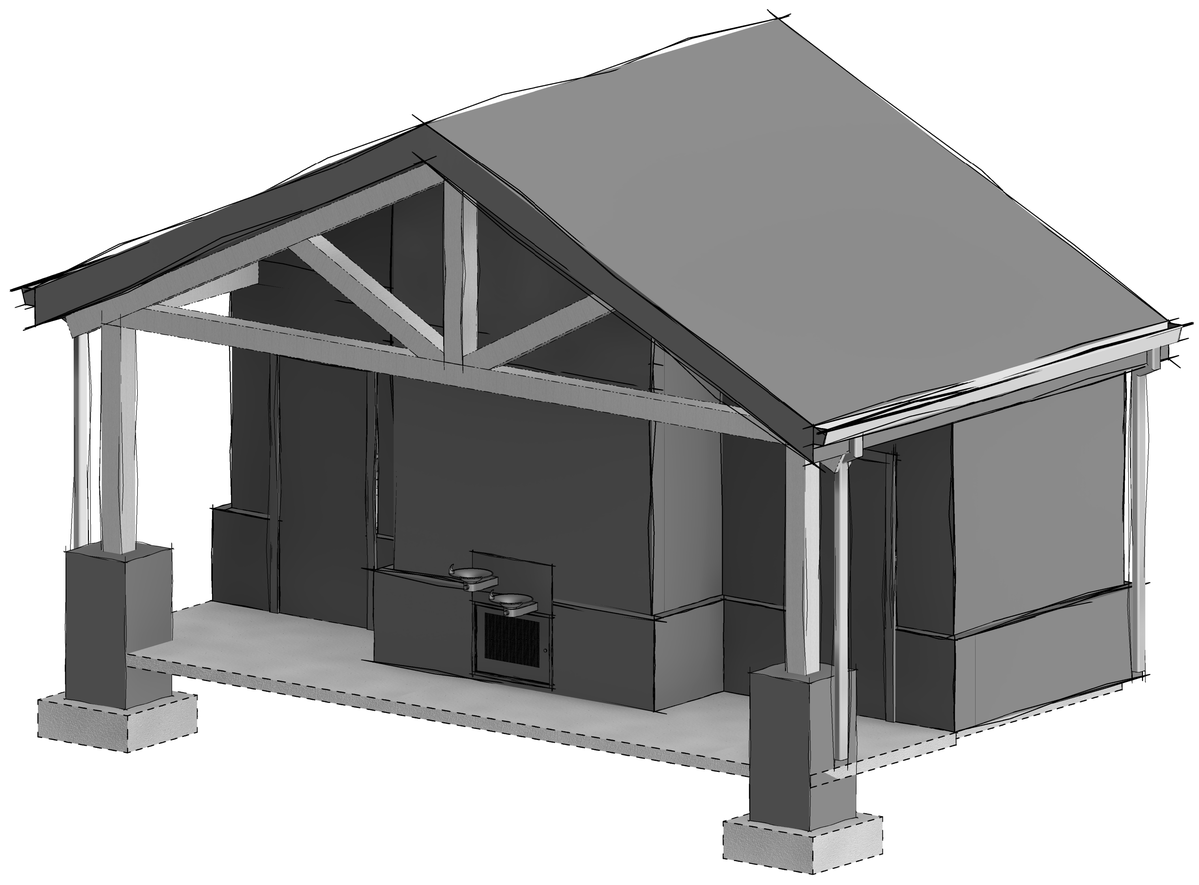

BUILDING DESIGN

DRYE-MCGLAMERY ENGINEERING, PLLC
HEATH DRYE, PE
PHONE: 919-616-3473
EMAIL: HEATH.DRYE@DRYEENGINEERING.COM

BUILDING DESIGN	
Sheet Number	Sheet Name
G-0	CODE SUMMARY
G-1	RESTROOM FLOOR PLAN
G-2	RESTROOM ELEVATIONS
G-3	ADA DETAILS
G-4	ADA DETAILS
G-5	ADA DETAILS

STRUCTURAL

DRYE-MCGLAMERY ENGINEERING, PLLC
HEATH DRYE, PE
PHONE: 919-616-3473
EMAIL: HEATH.DRYE@DRYEENGINEERING.COM

STRUCTURAL	
Sheet Number	Sheet Name
S-0	GENERAL NOTES
S-1	RESTROOM FOUNDATION PLAN
S-2	RESTROOM FRAMING PLANS
S-3	RESTROOM SECTIONS
S-4	FOUNDATION DETAILS
S-5	FRAMING DETAILS
S-6	TIMBER TRUSS DETAILS
S-7	FRAMING DETAILS

MEP

GAR ENGINEERING
GREGORY A. RIFFE, PE
PHONE: 704-721-6449
EMAIL: RYAN@GAARENGINEERING.COM

MEP	
Sheet Number	Sheet Name
E-01	ELECTRICAL PLAN
M-01	MECHANICAL PLAN
P-01	PLUMBING PLAN

DRYE McGLAMERY ENGINEERING, PLLC
NC FIRM LICENSE #P-1305

NORTH CAROLINA PROFESSIONAL SEAL 040795 ENGINEER HEATH WESTON DRYE
2025-04-02

No.	Description	Date
1	ISSUED FOR PROGRESS	2025-02-27
2	ISSUED FOR CONSTRUCTION	2025-04-02

BLUE RIDGE CONSERVANCY
RESTROOM
BOONE GORGE PARK
BOONE, NC 28607

DRYE-MCGLAMERY ENGINEERING, PLLC
325 McGILL AVENUE NW SUITE 115
CONCORD, NC 28027

ISSUED FOR CONSTRUCTION

DME PROJECT #: 2025045
DRAWN BY CJH
CHECKED BY HWD

COVER SHEET

CS-0

BUILDING CODE SUMMARY: 2018 NORTH CAROLINA STATE BUILDING CODE

BUILDING CODE SUMMARY

NAME OF PROJECT: BLUE RIDGE CONSERVANCY RESTROOMS
ADDRESS: BOONE GORGE PARK, BOONE, NC ZIP CODE 28607
PROPOSED USE: RESTROOMS
OWNER / AUTHORIZED AGENT: CHARLIE BRADY PHONE #: 828-264-2511 EMAIL: charlie@blueridgeconservancy.org
OWNED BY: ☐ CITY / COUNTY ☒ PRIVATE ☐ STATE
CODE ENFORCEMENT JURISDICTION ☐ CITY ☒ COUNTY ☐ STATE

LEAD DESIGN PROFESSIONAL: HEATH W. DRYE, PE

DESIGNER	FIRM NAME	NAME	LICENSE #	TELEPHONE #	EMAIL:
BUILDING DESIGN	DRYE-MCGLAMERY ENGINEERING, PLLC	HEATH W. DRYE, PE	040795	919-616-3473	heath.drye@dryeengineering.com
CIVIL	N / A	N / A	N / A	N / A	N / A
ELECTRICAL	GAR ENGINEERING	GREGORY A. RIFFE, PE	16396	704-721-6449	ryan@garengineering.com
FIRE ALARM	N / A	N / A	N / A	N / A	N / A
PLUMBING	GAR ENGINEERING	GREGORY A. RIFFE, PE	16396	704-721-6449	ryan@garengineering.com
MECHANICAL	GAR ENGINEERING	GREGORY A. RIFFE, PE	16396	704-721-6449	ryan@garengineering.com
Sprinkler-Standpipe	N/A	N / A	N / A	N / A	N / A
STRUCTURAL	DRYE-MCGLAMERY ENGINEERING, PLLC	HEATH W. DRYE, PE	040795	919-616-3473	heath.drye@dryeengineering.com
Retaining walls >5' High	N / A	N / A	N / A	N / A	N / A
Other	N / A	N / A	N / A	N / A	N / A

☒ 2018 NC BUILDING CODE FOR: ☒ NEW BUILDING ☐ ADDITION ☒ RENOVATION
☐ 1ST TIME INTERIOR COMPLETION
☐ SHELL/CORE- CONTACT THE LOCAL INSPECTION JURISDICTION FOR POSSIBLE ADDITIONAL PROCEDURES AND REQUIREMENTS
☐ PHASED CONSTRUCTION- SHELL/CORE- CONTACT THE LOCAL INSPECTION JURISDICTION FOR POSSIBLE ADDITIONAL PROCEDURES AND REQUIREMENTS

☐ 2018 NC EXISTING CODE: EXISTING: ☐ PRESCRIPTIVE ☐ REPAIR ☐ CHAPTER 14
☐ LEVEL 1 ☐ LEVEL II ☐ LEVEL III
☐ HISTORIC PROPERTY ☐ CHANGE OF USE

CONSTRUCTED: (DATE) _____ CURRENT OCCUPANCY (S) (CH. 3): BUSINESS (B)
RENOVATED: (DATE) _____ PROPOSED OCCUPANCY (S) (CH. 3): BUSINESS (B)
RISK CATEGORY (TABLE 1604.5): CURRENT: ☐ I ☒ II ☐ III ☐ IV
PROPOSED: ☐ I ☒ II ☐ III ☐ IV

BUILDING DATA
Construction Type: I-A ☐ II-A ☐ III-A ☐ IV-A ☐ V-A ☐
I-B ☐ II-B ☐ III-B ☐ V-B ☒

SPRINKLERS: ☐ NO ☐ PARTIAL ☒ YES ☐ NFPA 13 ☐ NFPA 13R ☐ NFPA 13D
STANDPIPES: ☒ NO ☐ YES CLASS: ☐ I ☐ II ☐ III ☐ WET ☐ DRY
Fire District: ☒ NO ☐ YES FLOOD HAZARD AREA: ☒ NO ☐ YES
SPECIAL INSPECTIONS REQUIRED: ☒ NO ☐ YES (CONTACT THE LOCAL INSPECTION JURISDICTION FOR ADDITIONAL PROCEDURES AND REQUIREMENTS)

Building Height: FEET 15'-0" +/- NUMBER OF STORIES 1
MEZZANINE: ☒ NO ☐ YES

GROSS BUILDING AREA:

FLOOR	EXISTING SF	NEW SF	SUB-TOTAL
6TH FLOOR			
5TH FLOOR			
4TH FLOOR			
3RD FLOOR			
2ND FLOOR			
MEZZANINE			
1ST FLOOR	0 SF	162 SF	162 SF
LOWER LEVEL			
TOTAL:	0 SF	162 SF	162 SF

ALLOWABLE AREA:
PRIMARY OCCUPANCY: ASSEMBLY ☐ A-1 ☐ A-2 ☐ A-3 ☐ A-4 ☐ A-5
☒ BUSINESS ☐ EDUCATIONAL ☐ FACTORY ☐ F-1 MODERATE ☐ F-2 LOW
HAZARDOUS ☐ H-1 DETONATE ☐ H-2 DEFLAGRATE ☐ H-3 COMBUST ☐ H-4 HEALTH ☐ H-5 HPM
INSTITUTIONAL ☐ I-1 ☐ I-2 ☐ I-3 ☐ I-4
I-3 CONDITION ☐ 1 ☐ 2 ☐ 3 ☐ 4 ☐ 5
☐ MERCANTILE ☐ RESIDENTIAL ☐ R-1 ☐ R-2 ☐ R-3 ☐ R-4
STORAGE ☐ S-1 MODERATE ☐ S-2 LOW ☐ HIGH-PILED
UTILITY & MISCELLANEOUS ☐ PARKING GARAGE ☐ OPEN ☐ ENCLOSED ☐ REPAIR

ACCESSORY OCCUPANCY CLASSIFICATION (S):
INCIDENTAL USES (TABLE 509):
SPECIAL USES (CHAPTER 4 - LIST CODE SECTIONS):
SPECIAL PROVISIONS: (CHAPTER 5 - LIST CODE SECTIONS):

MIXED OCCUPANCY: ☒ NO ☐ YES SEPARATION: N/A HR. EXCEPTION: N/A
☐ INCIDENTAL USE SEPARATION (508.2.5) THIS SEPARATION IS NOT EXEMPT AS A NON-SEPARATED USE (SEE EXCEPTIONS.)
☐ NON-SEPARATED USE (508.3)
The required type of construction for the building shall be determined by applying the height and area limitations for each of the applicable occupancies to the entire building. The most restrictive type of construction, so determined, shall apply to the entire building.
☐ Separated Mixed Occupancy (508.4) - See below for area calculations
For each story, the area of the occupancy shall be such that sum of the ratios of the actual floor area of each use divided by the allowable floor area for each use shall not exceed 1.

Actual Area of Occupancy A / Allowed Area Occupancy A + Actual Area of Occupancy B / Allowed Area Occupancy B < 1
_____ + _____ + ... = ____ < 1.00

STORY NO.	DESCRIPTION AND USE	(A) BLDG AREA PER STORY (ACTUAL)	(B) TABLE 506.2 [4] AREA	(C) AREA FOR FRONTAGE INCREASE [1,5]	(D) ALLOWABLE AREA PER STORY OR UNLIMITED [2,3]
FLOOR 1	BUSINESS B	162 SF	9,000 SF	N/A	9,000 SF

1. Open space area increase from Section 506.3 are computed thus:
   a. Perimeter which fronts a public way or open space having 20 feet minimum width = _____ (F)
   b. Total Building Perimeter = _____(P)
   c. Ratio (F/P) = _____ (F/P)
   d. W= Minimum width of public way = _____(W)
   e. Percent of frontage increase I = 100 [F/P - 0.25] x W/30 = _____(%)
2. Unlimited area applicable under conditions of Sections 507
3. Maximum Building Area = TOTAL NUMBER OF STORIES IN THE BUILDING X D (MAXIMUM 3 STORIES) (506.2)
4. The maximum area of OPEN parking garages must comply with 406.5.4
5. FRONTAGE INCREASE IS BASED ON THE UNSPRINKLERED AREA VALUE IN TABLE 506.2

ALLOWABLE HEIGHT

	ALLOWABLE	SHOWN ON PLANS	CODE REFERENCE
BUILDING HT IN FEET (TABLE 504.3) [2]	40'-0"	15'-0" +/-	
BUILDING HT IN STORIES (TABLE 504.4) [3]	2	1	

1. PROVIDE CODE REFERENCE IF THE "SHOWN ON PLANS" QUANITY IS NOT BASED ON TABLE 504.3 OR 504.4.
2. THE MAXIMUM HEIGHT OF AIR TRAFFIC CONTROL TOWERS MUST COMPLY WITH TABLE 412.3.1
3. THE MAXIMUM HEIGHT OF OPEN PARKING GARAGES MUST COMPLY WITH TABLE 406.5.4.

FIRE PROTECTION REQUIREMENTS

LIFE SAFETY PLAN SHEET #, IF PROVIDED: _____

Rating	Fire Separation Distance (Feet)	Rating Req'd	Rating Provided	Detail # & Sheet #	UL Design # For Rated Assembly	Design # For Rated Penetration	Design # For Rated Joints
Structural frame, including columns, girders, trusses		0	0				
Bearing walls		NA	NA				
Exterior		NA	NA				
FRONT / PLAN SOUTH	> 30'	0	1				
LEFT / PLAN WEST	> 30'	0	1				
RIGHT / PLAN EAST	> 30'	0	1				
REAR / PLAN NORTH	> 30'	0	1				
Interior		NA	NA				
Nonbearing walls and partitions		NA	NA				
Exterior		NA	NA				
North		0	0				
East		0	0				
West		0	0				
South		0	0				
Interior walls & partitions		0	0				
Floor construction Including supporting beams and joists		0	0				
Roof construction Including supporting beams and joists		0	0				
Shafts Enclosures - Exit		NA	NA				
Shaft Enclosures - Other		NA	NA				
Corridor Separation		NA	NA				
Occupancy Separation		NA	NA				
Party/Fire Wall Separation		NA	NA				
Smoke Barrier Separation		NA	NA				
Tenant Separation		NA	NA				
Incidental Use Separation		NA	NA				

PERCENTAGE OF WALL OPENING CALCULATIONS

	DEGREE OF OPENINGS PROTECTION (TABLE 705.8)	ALLOWABLE AREA %	ACTUAL SHOWN ON PLANS %
FRONT / PLAN SOUTH ELEVATION	UNPROTECTED, NON-SPRINKLERED	NO LIMIT	15
REAR / PLAN NORTH ELEVATION	UNPROTECTED, NON-SPRINKLERED	NO LIMIT	7.5
LEFT / PLAN WEST ELEVATION	UNPROTECTED, NON-SPRINKLERED	NO LIMIT	0
RIGHT / PLAN EAST ELEVATION	UNPROTECTED, NON-SPRINKLERED	NO LIMIT	0

LIFE SAFETY SYSTEM REQUIREMENTS

EMERGENCY LIGHTING: ☒ NO ☐ YES
EXIT SIGNS: ☒ NO ☐ YES
FIRE ALARM: ☒ NO ☐ YES
SMOKE DETECTION SYSTEMS: ☒ NO ☐ YES ☐ PARTIAL
CARBON MONOXIDE DETECTION: ☒ NO ☐ YES

LIFE SAFETY PLAN REQUIREMENTS

☐ FIRE AND/ OR SMOKE RATED WALL LOCATIONS (CHAPTER 7)
☐ ASSUMED AND REAL PROPERTY LINE LOCATIONS (IF NOT ON THE SITE PLAN)
☐ EXTERIOR WALL OPENING AREA WITH RESPECT TO DISTANCE TO ASSUMED PROPERTY LINES (705.8)
☐ OCCUPANCY USE FOR EACH AREA AS IT RELATES TO OCCUPANT LOAD CALCULATION (TABLE 1004.1.2)
☐ OCCUPANT LOADS FOR EACH AREA
☐ EXIT ACCESS TRAVEL DISTANCES (1017)
☐ COMMON PATH OF TRAVEL DISTANCES (TABLES 1006.2.1 & 1006.3.2(1))
☐ DEAD END LENGTHS (1020.4)
☐ CLEAR EXIT WIDTHS FOR EACH DOOR
☐ MAXIMUM CALCULATED OCCUPANT LOAD CAPACITY EACH EXIT DOOR CAN ACCOMMODATE BASED ON EGRESS WIDTH (1005.3)
☐ ACTUAL OCCUPANT LOAD FOR EACH EXIT DOOR
☐ A SEPARATE SCHEMATIC PLAN INDICATING WHERE FIRE RATED FLOOR/CEILING/AND OR ROOF STRUCTURE IS PROVIDED FOR PURPOSES OF OCCUPANCY SEPARATION
☐ LOCATION OF DOORS WITH PANIC HARDWARE (1010.1.9.9)
☐ LOCATION OF DOORS WITH DELAYED EGRESS LOCKS AND THE AMOUNT OF DELAY (1010.1.9.7)
☐ LOCATION OF ELECTROMAGNETIC EGRESS LOCKS (1010.1.9.9)
☐ LOCATION OF DOORS EQUIPPED WITH HOLD OPEN DEVICES
☐ LOCATION OF EMERGENCY ESCAPE WINDOWS (1030)
☐ THE SQUARE FOOTAGE OF EACH FIRE AREA (202)
☐ THE SQUARE FOOTAGE OF EACH SMOKE COMPARTMENT FOR OCCUPANCY CLASSIFICATION 1-2 (407.5)(407.4)
☐ NOTE ANY CODE EXCEPTIONS OR TABLE NOTES THAT MAY HAVE BEEN UTILIZED REGARDING THE ITEMS ABOVE

ACCESSIBLE DWELLING UNITS
(SECTION 1107)

TOTAL UNITS	ACCESSIBLE UNITS REQUIRED	ACCESSIBLE UNITS PROVIDED	TYPE A UNITS REQUIRED	TYPE A UNITS PROVIDED	TYPE B UNITS REQUIRED	TYPE B UNITS PROVIDED	TOTAL ACCESSIBLE UNITS PROVIDED
				N/A			

ACCESSIBLE PARKING
(SECTION 1106)

LOT OR PARKING AREA	TOTAL # OF PARKING SPACES REQUIRED	TOTAL # OF PARKING SPACES PROVIDED	# OF ACCESSIBLE SPACES PROVIDED: REGULAR WITH 5' ACCESS AISLE	VAN SPACES WITH 132" ACCESS AISLE	VAN SPACES WITH 8' ACCESS AISLE	TOTAL # ACCESSIBLE PROVIDED
EXISTING		EXISTING, NO CHANGE				
PROPOSED						
TOTAL						

PLUMBING FIXTURE REQUIREMENTS
(TABLE 2902.1)

USE		WATERCLOSETS MALE	WATERCLOSETS FEMALE	WATERCLOSETS UNISEX	URINALS	LAVATORIES MALE	LAVATORIES FEMALE	LAVATORIES UNISEX	SHOWER / TUBS	DRINKING FOUNTAINS REGULAR	DRINKING FOUNTAINS ACCESSIBLE
SPACE	EXISTING										
	NEW	1	1			1	1				
	REQUIRED	1	1			1	1				

PLUMBING NOTES:
HIGH-LOW WATER FOUNTAIN PROVIDED

SPECIAL APPROVALS
Special approval : (Local Jurisdiction, Department of Insurance, SBCCI, ICC, etc.,describe below)

ENERGY SUMMARY

ENERGY REQUIREMENTS:
THE FOLLOWING DATA SHALL BE CONSIDERED MINIMUM AND ANY SPECIAL ATTRIBUTE REQUIRED TO MEET THE ENERGY CODE
SHALL ALSO BE PROVIDED. EACH DESIGNER SHALL FURNISH THE REQUIRED PORTION OF THE PROJECT INFORMATION FOR THE
PLAN DATA SHEET. IF PERFORMANCE METHOD, STATE THE ANNUAL ENERGY COST FOR THE STANDARD REFERENCE DESIGN VS
ANNUAL ENERGY COST FOR THE PROPOSED DESIGN.

EXISTING BUILDING ENVELOPE COMPLIES WITH CODE: ☐ NO ☐ YES (THE REMAINDER OF THIS SECTION IS NOT APPLICABLE)

EXEMPT BUILDING: ☒ NO ☐ YES (PROVIDE CODE OR STATUTORY REFERENCE)

CLIMATE ZONE: ☐ 3A ☐ 4A ☒ 5A

METHOD OF COMPLIANCE: ENERGY CODE ☐ PERFORMANCE ☒ PRESCRIPTIVE
ASHRAE 90.1 ☐ PERFORMANCE ☐ PRESCRIPTIVE
(IF "OTHER" SPECIFY SOURCE HERE) _____

Roof/ceiling Assembly (ea. assembly)
Description of assembly: RAFTERS, CEILING JOISTS, BATT INSULATION
U-Value of total assembly
R-Value of total assembly
R-Value of insulation: R-42
Skylights in each assembly
U-Value of skylight
total square footage of

Walls adjacent to unconditioned space (ea. assembly)
Description of assembly: N/A
U-Value of total assembly
R-Value of insulation
Openings (windows or doors w/glazing)
U-Value of assembly
low e required, if applicable
Door R-Values

Floor over unconditioned space (ea. assembly)
Description of assembly: N/A
U-Value of total assembly
R-Value of total assembly
R-Value of insulation

Exterior Walls (ea. assembly)
Description of assembly: 2x6 STUD WALL WITH BATT INSULATION
U-Value of total assembly
R-Value of total assembly
R-Value of insulation: 20
Openings (windows or doors w/glazing)
U-Value of assembly: 0.330
shading coefficient: 0.325
projection factor
low e required, if applicable
Door R-Values: 2

Walls below grade (ea. assembly)
Description of assembly: N/A
U-Value of total assembly
R-Value of insulation

Floor slab on grade
Description of assembly: 4" SLAB ON GRADE
U-Value of total assembly
R-Value of total assembly
R-Value of insulation: 15
Horizontal/vertical requirement
slab heated: NO

STRUCTURAL DESIGN
(PROVIDE ON STRUCTURAL SHEETS IF APPLICABLE)

DESIGN LOADS:
IMPORATANCE FACTORS:
Snow: (Is) 1.0
Seismic: (Ie) 1.0
Live Loads: Roof: 20 psf
Floor: 50 psf

GROUND SNOW LOAD: 20 psf

Wind Loads: ULTIMATE WIND SPEED 130 MPH (ASCE 7-10)

SEISMIC PERFORMANCE CATEGORY C
Compliance with Section 1616.4 only? ☒ NO ☐ YES
SEISMIC PERFORMANCE CATEGORY B & C
Occupancy Group: 2
Seismic Design Category: C
Site Classification: D (ASSUMED)
Ss: 0.255
S1: 0.097
Sds: 0.272
Sd1: 0.155

Basic structural system (check one)
X Bearing Wall ___ Dual w/Special Moment Frame
___ Building Frame ___ Dual w/Intermediate R/C or Special Steel
___ Moment Frame ___ Inverted Pendulum
Response Modification Coefficient R= 6 1/2
Seismic Response Coefficient Cs= 0.0418
Analysis Procedure ___ Simplified X Equivalent Lateral Force ___ Modal

LATERAL DESIGN CONTROL : WIND

SOIL BEARING CAPACITIES:
Field Test (Provide copy of test report) N/A PSF
Presumptive Bearing Capacity 2,000 PSF
Pile size, type, and capacity N/A

DRYE McGLAMERY ENGINEERING, PLLC
NC FIRM LICENSE #P-1305

NORTH CAROLINA PROFESSIONAL SEAL 040795 ENGINEER HEATH WESTON DRYE 2025-04-02

No.	Description	Date
1	ISSUED FOR PROGRESS	2025-02-27
2	ISSUED FOR CONSTRUCTION	2025-04-02

BLUE RIDGE CONSERVANCY
RESTROOM
BOONE GORGE PARK
BOONE, NC 28607

DRYE-MCGLAMERY ENGINEERING, PLLC
325 McGILL AVENUE NW SUITE 115
CONCORD, NC 28027

ISSUED FOR CONSTRUCTION

DME PROJECT #: 2025045
DRAWN BY CJH
CHECKED BY HWD

CODE SUMMARY

G-0

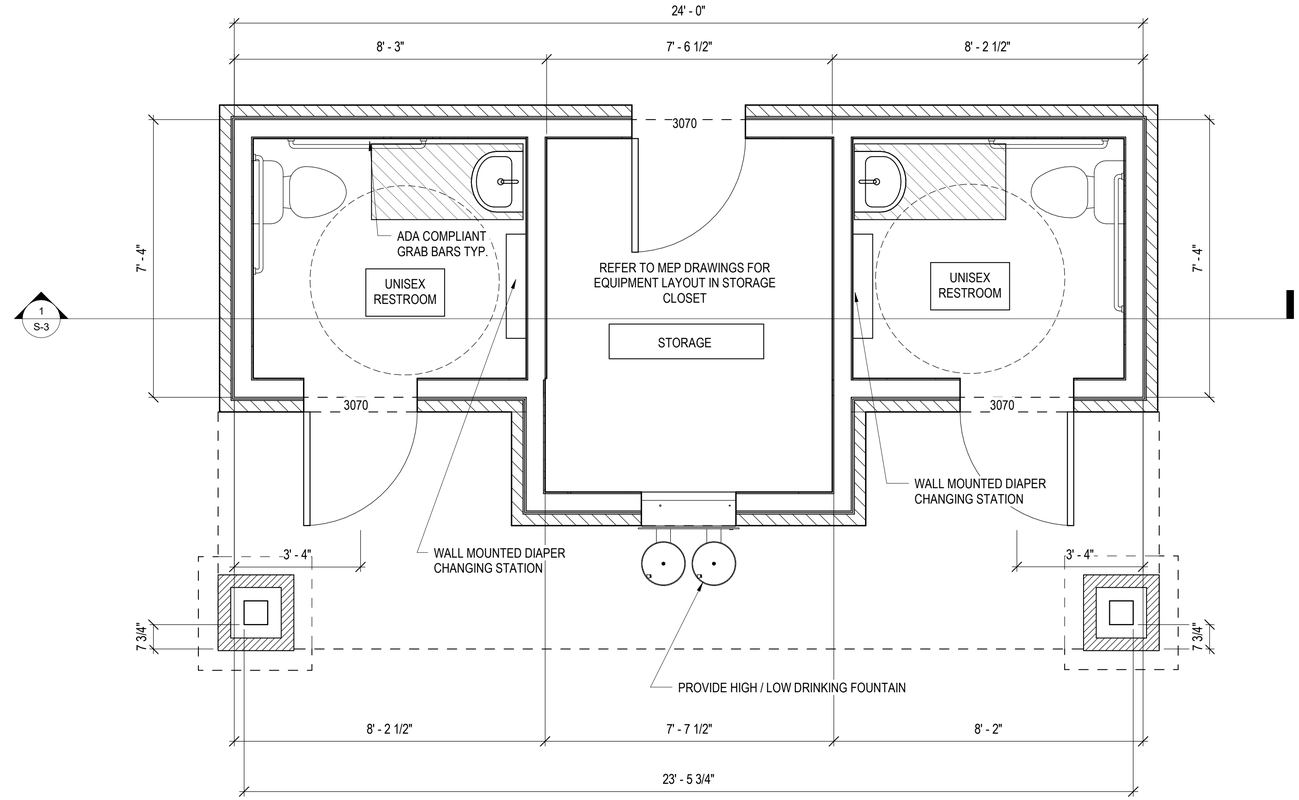

1 RESTROOM FLOOR PLAN
1/2" = 1'-0"

RESTROOM NOTES:

1. RESTROOM COUNTERTOPS TO BE LAMINATE TYP.
2. ALL WALLS TO BE 2x6 TO RECEIVE R-20 INSULATION TYP.
3. TOILETS SHALL BE ELONGATED BOWL, FLUSH VALVE, JET FLUSH.
4. FLOOR FINISH SHALL BE SMOOTH TROWELED FINISH WITH DRAINS IN BOTH RESTROOMS AND STORAGE. FIELD LOCATE / COORDINATE WITH OWNER
5. GLASS MIRRORS SHALL BE FULL WIDTH OF VANITY TOPS. COORDINATE WITH OWNER.
6. PROVIDE HAND DRYER. COORDINATE SIZE, BRAND AND LOCATION BRAND WITH OWNER.
7. WALL FINISH TO BE CERAMIC TILE OVER 5/8" GYPSUM TYP. UNO. ON ALL RESTROOM WALLS (FLOOR TO CEILING). WALL FINISH IN STORAGE SHALL BE PAINTED 5/8" GYPSUM. CERAMIC TILE SIZE SHALL BE APPROX. 12"x18".
8. CERAMIC TILE TYPE, GROUT, PATTERN ETC. TO BE SELECTED BY OWNER.
9. DOORS TO BE SMOOTH, INSULATED, STEEL DOOR. PROVIDE LOCKABLE DOOR HANDLE WITH STRIKE. FROM THE OUTSIDE, DOOR SHALL ONLY BE LOCKABLE WITH KEY. DOORS MUST MEET ALL 2018 NCBC AND BE ADA COMPLIANCT FOR ALL COMPONENTS AND OPERATION.
10. ROOF TO BE 29GA STANDING SEAM. COLOR SPEC BY OWNER.
11. PROVIDE 6" K STYLE GUTTERS COLOR MATCHED TO ROOF.
12. SIDING TO BE 12" BOARD AND BATTEN WOOD TEXTURED SIDING BY JAMES HARDIE OR EQUIVALENT. COLOR SPEC BY OWNER.
13. WAINSCOT TO BE THIN CUT NATURAL STONE VENEER. CONTRACTOR SHALL CARRY AN ALLOWANCE NOT TO EXCEED $15/SQUARE FOOT.
14. FRONT COVERED PORCH AREA CEILING TO RECIEVE 1x6 TONGUE AND GROOVE FASTENED TO CEILING JOISTS.
15. PROVIDE SEMI SOLID STAIN AS SPECIFIED BY OWNER ON ALL WOOD COMPONENTS (POSTS, TRUSSES, CEILING).
16. PROVIDE "UNISEX" RESTROOM SIGNAGE SIMILAR TO SIGN SHOWN HEREIN FOR BOTH RESTROOMS.

INSULATION NOTES:

1. ALL WALLS TO RECEIVE R-20 INSULATION.
2. ALL CEILINGS TO RECEIVE R-42 INSULATION.
3. ALL SLAB ON GRADE TO RECEIVE R-15 (3" RIGID FOAM) FOR 24" AROUND PERIMETER AND EXTEND DOWNWARD ON INSIDE OF THICKENED SLABS.

DRYE McGLAMERY
ENGINEERING, PLLC
NC FIRM LICENSE #P-1305

NORTH CAROLINA PROFESSIONAL SEAL 040795 ENGINEER HEATH WESTON DRYE
2025-04-02

No.	Description	Date
1	ISSUED FOR PROGRESS	2025-02-27
2	ISSUED FOR CONSTRUCTION	2025-04-02

BLUE RIDGE CONSERVANCY
RESTROOM
BOONE GORGE PARK
BOONE, NC 28607

DRYE-MCGLAMERY
ENGINEERING, PLLC
325 McGILL AVENUE NW SUITE 115
CONCORD, NC 28027

ISSUED FOR CONSTRUCTION

DME PROJECT #: 2025045
DRAWN BY CJH
CHECKED BY HWD

RESTROOM FLOOR PLAN

G-1

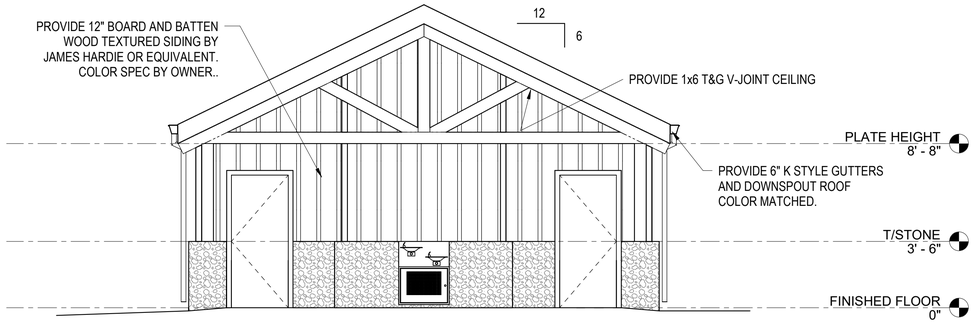

1 FRONT ELEVATION
1/4" = 1'-0"

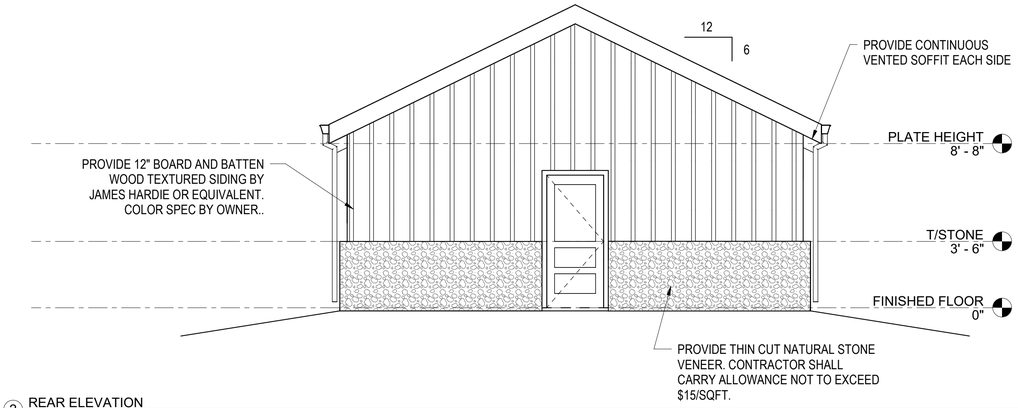

2 REAR ELEVATION
1/4" = 1'-0"

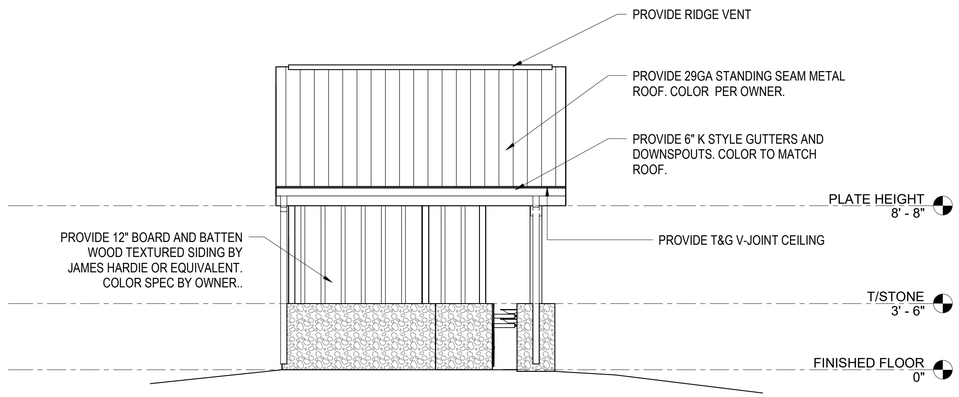

3 LEFT ELEVATION
1/4" = 1'-0"

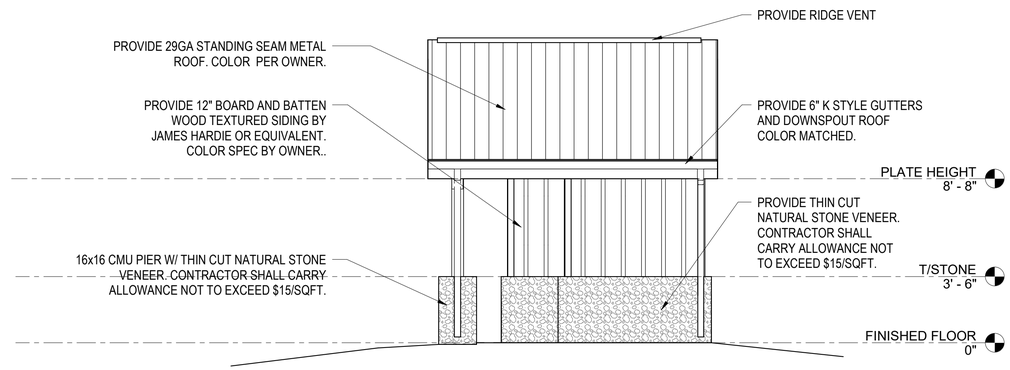

4 RIGHT ELEVATION
1/4" = 1'-0"

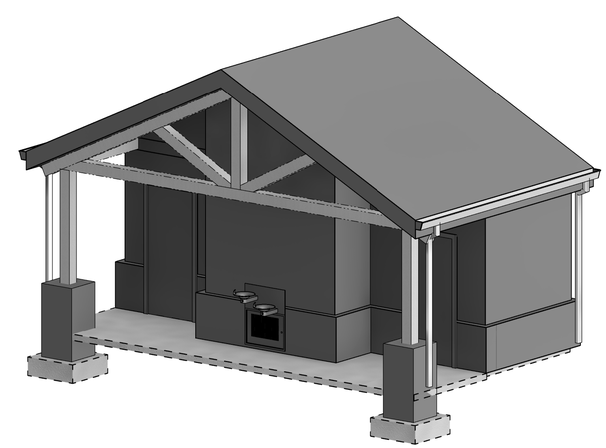

5 PROJECT OVERVIEW

DRYE McGLAMERY ENGINEERING, PLLC
NC FIRM LICENSE #P-1305

NORTH CAROLINA PROFESSIONAL SEAL 040795 ENGINEER HEATH WESTON DRYE
2025-04-02

No.	Description	Date
1	ISSUED FOR PROGRESS	2025-02-27
2	ISSUED FOR CONSTRUCTION	2025-04-02

BLUE RIDGE CONSERVANCY
RESTROOM
BOONE GORGE PARK
BOONE, NC 28607

DRYE-MCGLAMERY ENGINEERING, PLLC
325 McGILL AVENUE NW SUITE 115
CONCORD, NC 28027

ISSUED FOR CONSTRUCTION

DME PROJECT #: 2025045
DRAWN BY CJH
CHECKED BY HWD

RESTROOM ELEVATIONS

G-2

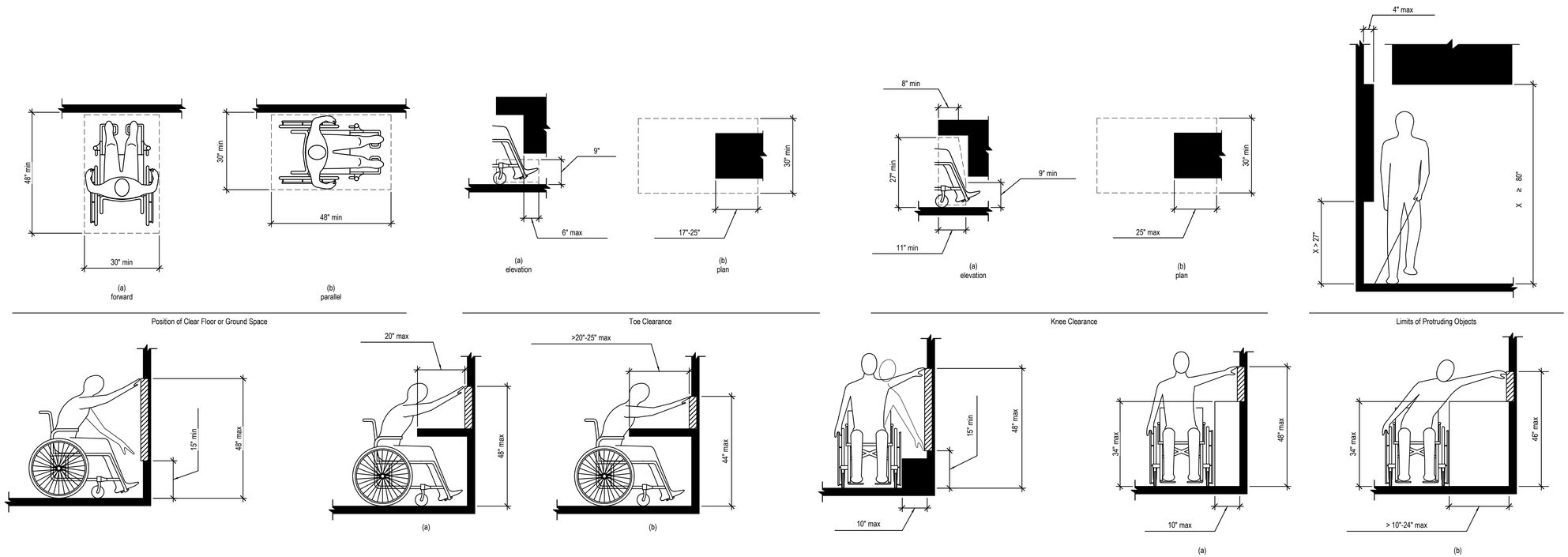

These Drawings Produced by the U.S. Access Board

1 TYPICAL ADA DETAILS
1/2" = 1'-0"

DRYE McGLAMERY ENGINEERING, PLLC
NC FIRM LICENSE #P-1305

NORTH CAROLINA PROFESSIONAL SEAL 040795 ENGINEER HEATH WESTON DRYE 2025-04-02

No.	Description	Date
1	ISSUED FOR PROGRESS	2025-02-27
2	ISSUED FOR CONSTRUCTION	2025-04-02

BLUE RIDGE CONSERVANCY
RESTROOM
BOONE GORGE PARK
BOONE, NC 28607

DRYE-MCGLAMERY
ENGINEERING, PLLC
325 McGILL AVENUE NW SUITE 115
CONCORD, NC 28027

ISSUED FOR CONSTRUCTION

DME PROJECT #: 2025045
DRAWN BY CJH
CHECKED BY HWD

ADA DETAILS

G-3

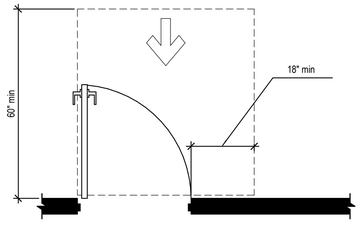

(a)
front approach, pull side

Maneuvering Clearance at Manual Swinging Doors and Gates

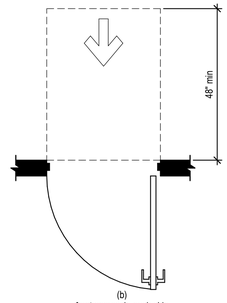

(b)
front approach, push side

Maneuvering Clearance at Manual Swinging Doors and Gates

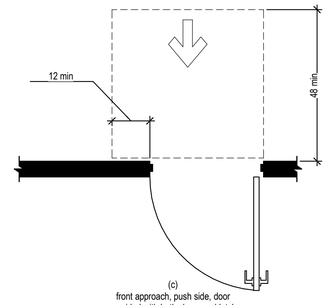

(c)
front approach, push side, door provided with both closer and latch

Maneuvering Clearance at Manual Swinging Doors and Gates

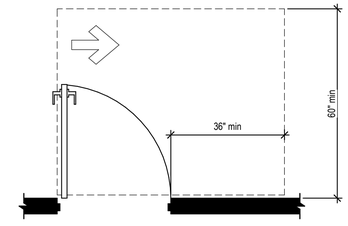

(d)
hinge approach, pull side

Maneuvering Clearance at Manual Swinging Doors and Gates

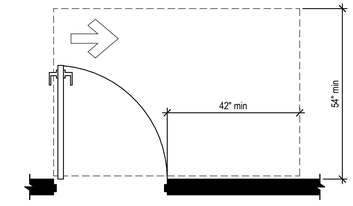

(e)
hinge approach, pull side

Maneuvering Clearance at Manual Swinging Doors and Gates

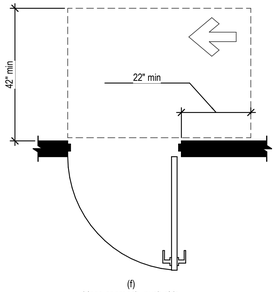

(f)
hinge approach, push side

Maneuvering Clearance at Manual Swinging Doors and Gates

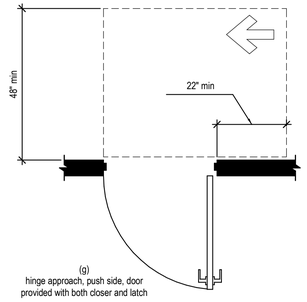

(g)
hinge approach, push side, door provided with both closer and latch

Maneuvering Clearance at Manual Swinging Doors and Gates

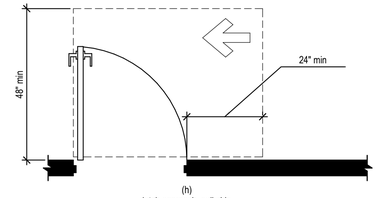

(h)
latch approach, pull side

Maneuvering Clearance at Manual Swinging Doors and Gates

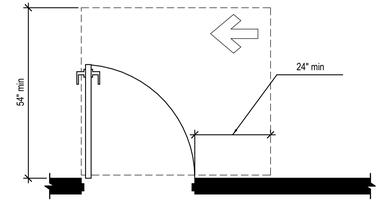

(i)
latch approach, pull side, door provided with closer

Maneuvering Clearance at Manual Swinging Doors and Gates

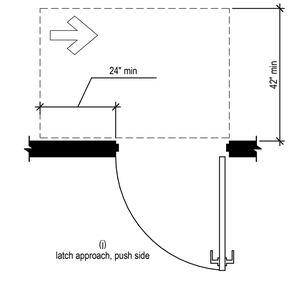

(j)
latch approach, push side

Maneuvering Clearance at Manual Swinging Doors and Gates

These Drawings Produced by the U.S. Access Board

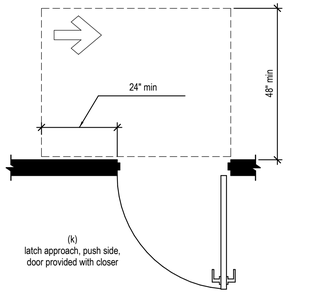

(k)
latch approach, push side, door provided with closer

Maneuvering Clearance at Manual Swinging Doors and Gates

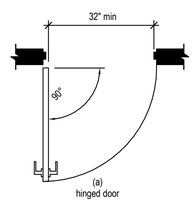

(a)
hinged door

Clear Width of Doorways

1 TYPICAL ADA DETAILS 2
1/2" = 1'-0"

DRYE McGLAMERY ENGINEERING, PLLC
NC FIRM LICENSE #P-1305

NORTH CAROLINA PROFESSIONAL SEAL 040795 ENGINEER HEATH WESTON DRYE
2025-04-02

No.	Description	Date
1	ISSUED FOR PROGRESS	2025-02-27
2	ISSUED FOR CONSTRUCTION	2025-04-02

BLUE RIDGE CONSERVANCY
RESTROOM
BOONE GORGE PARK
BOONE, NC 28607

DRYE-MCGLAMERY
ENGINEERING, PLLC
325 McGILL AVENUE NW SUITE 115
CONCORD, NC 28027

ISSUED FOR CONSTRUCTION

DME PROJECT #: 2025045
DRAWN BY CJH
CHECKED BY HWD

ADA DETAILS

G-4

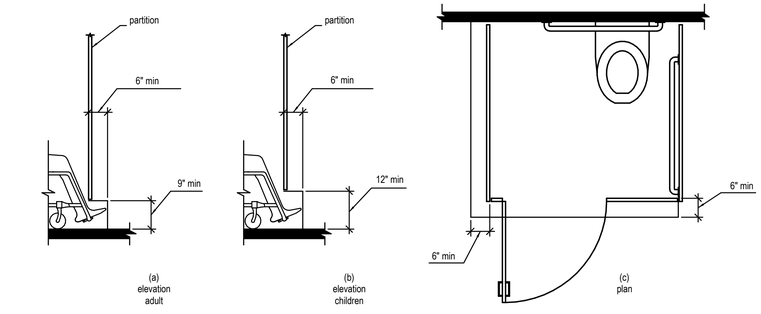

Wheelchair Accessible Toilet Compartment Toe Clearance

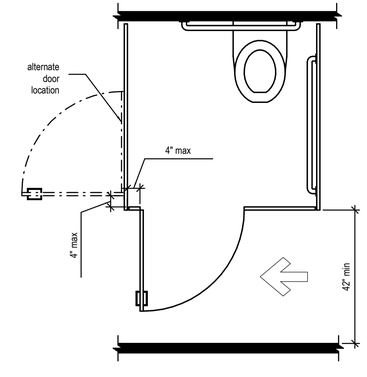

Wheelchair Accessible Toilet Compartment Doors

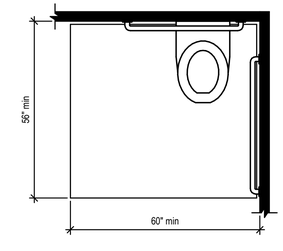

Size of Clearance at Water Closets

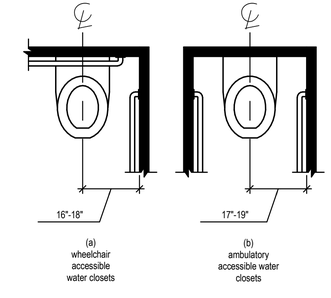

Water Closet Location

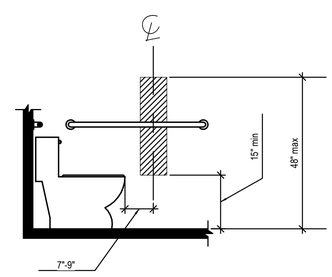

Dispenser Outlet Location

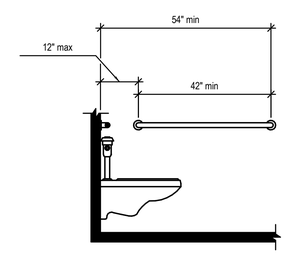

Side Wall Grab Bar at Water Closets

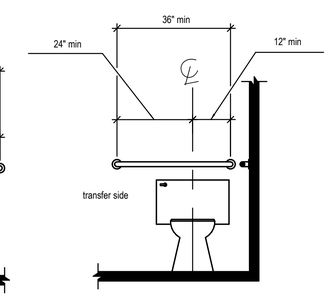

Rear Wall Grab Bar at Water Closets

These Drawings Produced by the U.S. Access Board

1 TYPICAL ADA DETAILS 3
1/2" = 1'-0"

DRYE McGLAMERY ENGINEERING, PLLC
NC FIRM LICENSE #P-1305

NORTH CAROLINA PROFESSIONAL SEAL 040795 ENGINEER HEATH WESTON DRYE 2025-04-02

No.	Description	Date
1	ISSUED FOR PROGRESS	2025-02-27
2	ISSUED FOR CONSTRUCTION	2025-04-02

BLUE RIDGE CONSERVANCY
RESTROOM
BOONE GORGE PARK
BOONE, NC 28607

DRYE-MCGLAMERY
ENGINEERING, PLLC
325 McGILL AVENUE NW SUITE 115
CONCORD, NC 28027

ISSUED FOR CONSTRUCTION

DME PROJECT #: 2025045
DRAWN BY CJH
CHECKED BY HWD

ADA DETAILS

G-5

I. GENERAL

1. THE STRUCTURE IS DESIGNED AND MEETS THE DESIGN CRITERIA OF THE FOLLOWING CODES AND STANDARDS:
   - *2018 NORTH CAROLINA STATE BUILDING CODE (2015 INTERNATIONAL BUILDING CODE WITH CHANGES)*
   - ASCE 7-10, *MINIMUM DESIGN LOAD FOR BUILDINGS AND OTHER STRUCTURES*
   - ACI 318-14, *BUILDING CODE REQUIREMENTS FOR STRUCTURAL CONCRETE*
   - ANSI/AWC NDS-2015, *NATIONAL DESIGN SPECIFICATION FOR WOOD CONSTRUCTION*
   - TMS 402-13/ACI 530-13/ASCE 5-13, *BUILDING CODE REQUIREMENTS FOR MASONRY STRUCTURES*
   - TMS 602-13/ACI 530.1-13/ASCE 6-13, *SPECIFICATION FOR MASONRY STRUCTURES*
   - ALL OTHER REFERENCED CODES OR STANDARDS SHALL REFER TO THE EDITION OF THE CODE/STANDARD ENFORCED AT THE TIME THE STRUCTURAL CONTRACT DRAWINGS ARE ISSUED FOR PERMIT.

2. ALL METHODS, PROCEDURES, AND SEQUENCES OF CONSTRUCTION ARE THE RESPONSIBILITY OF THE CONTRACTOR. THE STRUCTURE, AS DEPICTED ON THE CONTRACT DRAWINGS, IS STRUCTURALLY STABLE IN IT'S COMPLETED FORM. BRACING, SHORING, OR OTHER ADDITIONAL SUPPORT MAY BE NECESSARY TO ENSURE STRUCTURAL STABILITY DURING VARIOUS STAGES OF CONSTRUCTION. THE CONTRACTOR SHALL TAKE ALL NECESSARY PRECAUTIONS AND PROVIDE ALL NECESSARY BRACING OR SHORING, TO MAINTAIN AND INSURE THE INTEGRITY OF THE STRUCTURE AT ALL STAGES OF CONSTRUCTION. ALL BRACING SHALL BE DESIGNED AND DETAILED IN A MANNER THAT APPLIES LOAD DIRECTLY TO THE STRUCTURAL MEMBERS OR DIAPHRAGMS

3. SCALES NOTED ON THE DRAWINGS ARE FOR GENERAL REFERENCE ONLY. NO DIMENSIONAL INFORMATION SHALL BE OBTAINED BY DIRECT SCALING OF THE DRAWINGS. THE CONTRACTOR SHALL VERIFY ALL EXISTING DIMENSIONS RELEVANT TO ALL NEW CONSTRUCTION AND DEMOLITION, PRIOR TO COMPLETION OF SHOP DRAWINGS OR COMMENCEMENT OF WORK. ANY EXISTING DIMENSIONS IN CONTRADICTION TO WHAT IS SHOWN ON THE STRUCTURAL CONTRACT DRAWINGS SHALL BE REPORTED TO DRYE-MCGLAMERY ENGINEERING PROMPTLY.

4. ALL PRODUCT DATA, SHOP DRAWINGS, AND OTHER SUBMITTALS SHALL CONFORM TO THE REQUIREMENTS OF THE RELEVANT STANDARD AND/OR SPECIFICATION ENFORCED IN THE BUILDING CODE AT THE TIME PERMITS ARE ISSUED. IN ANY INSTANCE OF CONFLICT BETWEEN VERSIONS OF A STANDARD/SPECIFICATION REFERENCED IN THE STRUCTURAL DRAWINGS AND THE BUILDING CODE, THE CODE REFERENCED VERSION SHALL BE ADHERED TO.

II. MATERIAL STRENGTHS

1. CONCRETE (COMPRESSIVE STRENGTH, f'c AT 28 DAYS)

		MAX w/c RATIO
FOOTINGS	4,000 PSI	0.45
SLAB ON GRADE	4,000 PSI	0.45

* CONCRETE EXPOSED TO WEATHER SHALL BE AIR ENTRAINED *

2. REINFORCING STEEL (MINIMUM SPECIFIED YIELD STRESS, Fy)

REBAR (ASTM A615 GRADE 60)	60,000 PSI
DEFORMED STEEL WELDED WIRE REINFORCING (ASTM A1064)	65,000 PSI

3. STRUCTURAL STEEL (MINIMUM SPECIFIED YIELD STRESS, Fy)

ANGLES, PLATES & OTHER SHAPES (ASTM A36)	36,000 PSI
STRUCTURAL STEEL BOLTS (ASTM F3125 GRADE A325-N, U.N.O.)	120,000 PSI (Fu)
ANCHOR RODS (ASTM F1554 GRADE 36, U.N.O.)	36,000 PSI
WELDING RODS (E70XX, U.N.O.)	70,000 PSI (F_{EXX})

4. WOOD FRAMING (2015 NDS - MINIMUM SPECIES AND GRADE)

COLUMNS (4"x4" NOMINAL AND LARGER)	SOUTHERN PINE NO.2
BEAMS AND STUDS (2x DIMENSION LUMBER)	SOUTHERN PINE NO. 2 OR S-P-F NO. 2
SAWN LUMBER (PRESSURE TREATED)	SOUTHERN PINE NO.2
LVL BEAMS (MINIMUM PROPERTIES LISTED)	
Fb	2,600 PSI
Fv	285 PSI
Fc (PERPENDICULAR)	750 PSI
Fc	2,510 PSI
E	2,000 KSI

5. CONCRETE MASONRY (MINIMUM COMPRESSIVE STRENGTH PER UNIT STRENGTH METHOD)

NET AREA COMPRESSIVE STRENGTH OF CONCRETE MASONRY (ASTM C140)	
TYPE M OR S MORTAR, f'm	2,000 PSI
NET AREA COMPRESSIVE STRENGTH OF CONCRETE MASONRY UNITS (ASTM C90)	
TYPE M OR S MORTAR, f'cmu	2,000 PSI
MORTAR (MINIMUM 28-DAY COMPRESSIVE STRENGTH, ASTM C270)	
TYPE 'S'	1,800 PSI
GROUT (MINIMUM 28-DAY COMPRESSIVE STRENGTH, ASTM C476)	
ALL GROUT USED IN CONCRETE MASONRY	3,000 PSI

6. SOIL/SUBGRADE PROPERTIES ("SOIL TYPE _____")

ALLOWABLE SOIL BEARING PRESSURE (q)	2,000 PSF (ASSUMED)
SOIL MODULUS OF SUBGRADE REACTION (k)	100 PCI (ASSUMED)

III. FOUNDATION AND SLAB ON GRADE

1. THE FOUNDATION HAS BEEN DESIGNED FOR A PRESUMED ALLOWABLE SOIL BEARING PRESSURE OF 2,000 POUNDS PER SQUARE FOOT (PSF). THE ALLOWABLE SOIL BEARING PRESSURE SHALL BE VERIFIED IN THE FIELD BY THE OWNERS SPECIAL INSPECTOR OR LOCAL BUILDING INSPECTOR.

2. COLUMN FOOTINGS SHALL BE CENTERED ON COLUMN CENTERLINES UNLESS NOTED OTHERWISE. WALL FOOTINGS ARE CENTERED ON FOUNDATION WALL CENTERLINES UNLESS NOTED OTHERWISE.

3. ALL FOOTINGS SHALL BEAR ON ORIGINAL, UNDISTURBED SOIL OR APPROVED ENGINEERED COMPACTED FILL, BUT NOT HIGHER THAN THE MINIMUM DEPTH SHOWN ON DRAWINGS.

4. ALL SLABS ON GRADE SHALL BEAR ON ORIGINAL, UNDISTURBED SOIL OR APPROVED ENGINEERED COMPACTED FILL. CONTRACTOR SHALL PROVIDE A MINIMUM 4" THICK LAYER OF COMPACTED STONE BELOW ALL SLABS ON GRADE. A MINIMUM 6 MIL VAPOR BARRIER SHALL BE PROVIDED BETWEEN THE LAYER OF COMPACTED STONE AND THE SLAB ON GRADE, UNLESS NOTED OTHERWISE.

5. CONTRACTOR TO KEEP EXCAVATIONS DRY AND PROTECTED FROM FROST AT ALL TIMES DURING THE FOUNDATION CONSTRUCTION. CONTRACTOR SHALL DEWATER WHERE REQUIRED PRIOR TO ANY EXCAVATION WORK BEING DONE. ALL UNSUITABLE OR DELETERIOUS SOILS OR MATERIAL SHALL BE REMOVED FROM THE EXISTING GROUND SURFACE, WITHIN 10 FEET FROM THE PLANNED BUILDING AREA, PRIOR TO ANY EXCAVATION WORK BEING DONE.

6. FOUNDATION CONDITIONS NOTED DURING CONSTRUCTION, WHICH DIFFER FROM THE DESCRIBED ASSUMED VALUES SHOWN ON THE CONTRACT DRAWINGS OR HIGHLIGHTED IN THE GEOTECHNICAL REPORT SHALL BE REPORTED TO THE ARCHITECT AND DRYE-MCGLAMERY ENGINEERING, BEFORE FURTHER CONSTRUCTION IS ATTEMPTED.

IV. REINFORCED CONCRETE

1. CONCRETE REINFORCING SHALL HAVE THE FOLLOWING MINIMUM PROTECTIVE COVER:

CONCRETE POURED ON EARTH OR GROUND	3 IN.
CONCRETE EXPOSED TO WEATHER	
#6 THROUGH #18 BARS	2 IN.
#5 BAR, W31 OR D31 WIRE AND SMALLER	1 1/2 IN.
CONCRETE NOT EXPOSED TO EARTH OR WEATHER	
#14 AND #18 BARS	1 1/2 IN.
#11 BAR AND SMALLER	1 IN.

2. SLEEVES, CONDUITS, OR PIPES THROUGH SLABS AND WALLS SHALL BE PLACED SO THAT THEY ARE NOT CLOSER THAN THREE DIAMETERS ON CENTER AND THEY DO NOT DISPLACE REINFORCING STEEL.

3. DO NOT CUT OR PLACE HOLES IN CONCRETE SLABS, WITHOUT PRIOR APPROVAL OF DRYE-MCGLAMERY ENGINEERING.

4. BARS SHALL BE SPLICED PER DETAILS WHERE PROVIDED. OTHERWISE BARS SHALL BE CLASS "B" LAP SPLICED IN LONGEST CONVENIENT LENGTHS WITH ADJACENT LAPS STAGGERED 3'-0" MINIMUM. BARS SHALL BE CONTACT SPLICED OR SPACED A MINIMUM DISTANCE APART PER CRSI "REINFORCEMENT ANCHORAGES AND SPLICES", AND A MAXIMUM DISTANCE APART OF THE LESSER OF, 1/5 THE LAP LENGTH OR 6 INCHES.

5. CLEAR SPACING BETWEEN REBARS (UNLESS SHOWN TO BE CONTACT LAP SLICED) SHALL BE A MINIMUM OF 1-1/2 BAR DIAMETER, 1-1/2", OR 1-1/3 TIMES THE AGGREGATE SIZE, WHICHEVER IS GREATER.

6. ALL HOOKS NOT NOTED SHALL BE ACI STANDARD HOOKS.

7. NO TACK WELDING WILL BE PERMITTED ON GRADE 40 OR 60 STEEL.

8. REINFORCE SLABS AT ALL PENETRATIONS AND AT RE-ENTRANT CORNERS. PLACE #3x3'-0" AROUND FLOOR DRAINS. PLACE #4x4'-0" (MIN.) AT RE-ENTRANT CORNERS. HOLD REINFORCING 1" CLR FROM TOP OF CONCRETE.

9. IN NO INSTANCE SHALL WATER BE ADDED TO CONCRETE MIXES ON SITE. IF A MORE EASILY WORKABLE CONCRETE IS DESIRED, THE CONTRACTOR SHALL REQUEST A HIGH-RANGE WATER REDUCER, OR SUPERPLASTICIZER, BE ADDED TO THE CONCRETE MIX PRIOR TO ORDERING OR POURING THE CONCRETE.

10. CONCRETE EXPOSED TO WEATHER SHALL BE AIR ENTRAINED WITH 4% - 6% AIR ENTRAINMENT. REFER TO THE ASSIGNED EXPOSURE CLASS FOR ADDITIONAL INFORMATION AND REQUIREMENTS FOR AIR ENTRAINMENT FOR CONCRETE ELEMENTS.

V. MASONRY

1. ALL STRUCTURAL MASONRY CONSTRUCTION SHALL COMPLY WITH THE PROVISIONS OF TMS 402-13, *BUILDING CODE REQUIREMENTS FOR MASONRY STRUCTURES*, AS WELL AS TMS 602-13, *SPECIFICATION FOR MASONRY STRUCTURES*. ADDITIONALLY, ALL STRUCTURAL MASONRY CONSTRUCTION SHALL COMPLY WITH THE PROVISIONS OF CHAPTER 21 (MASONRY) OF *THE 2018 NORTH CAROLINA STATE BUILDING CODE*.

2. ALL STRUCTURAL CONCRETE MASONRY UNITS (CMU) SHALL BE OF LIGHTWEIGHT CONCRETE AND CONFORM TO THE REQUIREMENTS OF ASTM C90.

3. ALL MORTAR USED IN CONCRETE MASONRY UNIT CONSTRUCTION SHALL CONFORM TO THE REQUIREMENTS OF ASTM C270. ALL MORTAR SHALL BE TYPE M OR TYPE S MORTAR, WITH EITHER PORTLAND CEMENT OR MORTAR CEMENT. MASONRY CEMENT MORTAR SHALL NOT BE USED IN CONCRETE MASONRY UNIT CONSTRUCTION.

4. ALL GROUT USED IN CONCRETE MASONRY UNIT CONSTRUCTION SHALL CONFORM TO THE REQUIREMENTS OF ASTM C476 AND SHALL HAVE A MINIMUM COMPRESSIVE STRENGTH OF 3,000 PSI. ALL AGGREGATES USED IN GROUT FOR CONCRETE MASONRY UNIT CONSTRUCTION SHALL COMPLY WITH ASTM C404. GROUT SHALL BE SAMPLED AND TESTED IN ACCORDANCE WITH ASTM C1019, ADDITIONALLY GROUT SHALL HAVE A SLUMP IN THE RANGE OF 8 TO 11 INCHES AND SHALL BE RECONSOLIDATED BY MECHANICAL VIBRATION PER TMS 602/ACI 530.1.

5. CONCRETE MASONRY UNITS SHALL BE TESTED IN ACCORDANCE WITH THE REQUIREMENTS OF ASTM C140. ALL TESTING SHALL BE DONE BY AN APPROVED TESTING LABORATORY.

6. ALL HEAD AND BED JOINTS SHALL BE FULL.

VI. DIMENSION LUMBER - FLOOR AND ROOF FRAMING

1. BEARING. THE ENDS OF EACH JOIST SHALL HAVE NOT LESS THAT 11/2 INCHES OF BEARING ON WOOD SUPPORT AND SHALL BE INCREASED AS REQUIRED BY LOAD. BEARING LOADS SHALL BE TRANSFERRED TO THE SILLS BY STUDS OR COLUMNS WITH EQUAL OR GREATER THAN CROSS-SECTION OF THE SUPPORTED BEARING.

2. FRAMING DETAILS. JOISTS SHALL BE SUPPORTED LATERALLY AT THE ENDS AND AT EACH SUPPORT BY SOLID BLOCKING EXCEPT WHERE THE ENDS OF JOISTS ARE NAILED TO A HEADER, BAND OR RIM JOIST. SOLID BLOCKING SHALL BE NOT LESS THAN 2 INCHES IN THICKNESS AND THE FULL DEPTH OF THE JOIST.

3. FRAMING AROUND OPENINGS. TRIMMER AND HEADER JOISTS SHALL BE DOUBLED, OR OF LUMBER OF EQUIVALENT CROSS SECTION, WHEN THE SPAN OF THE HEADER EXCEEDS 4 FEET. THE ENDS OF HEADER JOISTS MORE THAN 6 FEET LONG SHALL BE SUPPORTED BY FRAMING ANCHORS OR JOIST HANGERS UNLESS BEARING ON A BEAM, PARTITION OR WALL. TAIL JOISTS SHALL BE SUPPORTED AT HEADER BY STEEL FRAMING ANCHORS.

4. RAFTERS SHALL BE FRAMED DIRECTLY OPPOSITE EACH OTHER AN THE RIDGE AND WHEREVER POSSIBLE ON THE HIPS AND VALLEYS. RIDGES SHALL BE AT LEAST 1 INCH NOMINAL THICKNESS AND NOT LESS IN DEPTH THAN THE CUT END OF THE RAFTER. AT ALL VALLEY AND HIPS THERE SHALL BE A SINGLE VALLEY OR HIP RAFTER NOT LESS THAN 2 INCH NOMINAL THICKNESS AND NOT LESS IN DEPTH THAN THE CUT END OF THE RAFTER. WHENEVER THE RAFTER DO NOT ALIGN WITH EACH OTHER ON THE RIDGE, HIP OR VALLEY, THE RIDGE, HIP OR VALLEY MUST BE DESIGNED AS A BEAM.

5. RAFTERS SHALL BE NAILED TO ADJACENT CEILING JOIST TO FORM A CONTINUOUS TIE BETWEEN EXTERIOR WALLS WHEN SUCH JOISTS ARE PARALLEL TO THE RAFTERS. WHERE NOT PARALLEL, RAFTERS SHALL BE TIED TO 2 BY 4 (NOMINAL) MINIMUM SIZE CROSS TIES. RAFTER TIES SHALL BE SPACED NOT MORE THAN 4 FEET ON CENTER. THE SEAT CUT AT THE RAFTER BIRD'S MOUTH SHALL BE NO LONGER THAN IT'S BEARING MEMBER.

6. ROOF RAFTERS AND CEILING JOISTS SHALL BE SUPPORTED LATERALLY TO PREVENT ROTATION AND LATERAL DISPLACEMENT. SEE FLOOR JOIST NOTES ON THIS SHEET.

7. PLYWOOD MUST BE OF MINIMUM 1/2" THICKNESS AND MEET ALL OTHER REQUIREMENTS OF THE CODE. END JOINTS IN PLYWOOD SHALL OCCUR OVER SUPPORTS AND END JOINTS SHALL BE STAGGERED A MINIMUM OF ONE MEMBER ON ADJACENT ROWS

VII. WOOD CONSTRUCTION CONNECTORS

1. ALL WOOD CONSTRUCTION CONNECTORS SHOWN SHALL BE SIMPSON STRONG-TIE CONNECTORS MANUFACTURED BY SIMPSON STRONG-TIE COMPANY, INC. (OR APPROVED EQUIVALENT). BEFORE SUBSTITUTING ANOTHER BRAND, CONFORM LOAD CAPACITY BASED ON RELIABLE PUBLISHED TESTING DATA OR CALCULATIONS AND SUBMIT TO DRYE-McGLAMERY ENGINEERING,PLLC FOR EVALUATION AND WRITTEN APPROVAL FOR SUBSTITUTION PRIOR TO INSTALLATION.

2. ALL SPECIFIED FASTENERS SHALL BE INSTALLED ACCORDING TO THE DETAILS AND THE MANUFACTURER'S INSTRUCTIONS. ALL HOLES IN CONNECTORS SHALL BE PROPERLY NAILED TO THE WOOD STRUCTURE. CONTACT DRYE-McGLAMERY ENGINEERING, PLLC FOR FASTENERS NOT SHOWN. INCORRECT FASTENER QUANTITY, SIZE, TYPE, MATERIAL, OR FINISH MAY CAUSE THE CONNECTION TO FAIL. 16D FASTENERS ARE COMMON NAILS (8 GA. X 3 1/2") AND CANNOT BE REPLACED WITH 16D SINKERS (9GA. X 3 1/4") UNLESS OTHERWISE SPECIFIED.

3. DIAMETER (PER THE NDS, SECTION 8.1.2.1).

4. INSTALL ALL SPECIFIED FASTENERS BEFORE LOADING THE CONNECTION.

5. WELDING GALVANIZED STEEL MAY PRODUCE HARMFUL FUMES; FOLLOW PROPER WELDING PROCEDURES AND SAFETY PRECAUTIONS. WELDING SHOULD BE IN ACCORDANCE WITH AWS STANDARDS.

6. PNEUMATIC OR POWDER-ACTUATED FASTENERS MAY DEFLECT AND INJURE THE OPERATOR OR OTHERS. NAIL GUNS MAY BE USED TO INSTALL CONNECTORS, PROVIDED THE CORRECT QUANTITY AND TYPE OF NAILS ARE PROPERLY INSTALLED IN THE NAIL HOLES. GUNS WITH NAIL HOLE-LOCATING MECHANISMS SHOULD BE USED. FOLLOW THE MANUFACTURER'S INSTRUCTIONS AND USE THE APPROPRIATE SAFETY EQUIPMENT.

7. JOISTS SHALL BEAR COMPLETELY ON THE CONNECTOR SEAT, AND THE GAP BETWEEN THE JOIST END AND THE HEADER SHALL NOT EXCEED 1/8" PER ASTM TEST STANDARDS.

8. UNLESS OTHERWISE NOTED, BOLTS AND NAILS SHALL NOT BE COMBINED. 8D, 10D, AND 16D SPECIFY COMMON NAILS.

9. UNLESS OTHERWISE NOTED, BENDING STEEL IN THE FIELD MAY CAUSE FRACTURES AT THE BEND LINE. FRACTURED STEEL WILL NOT CARRY LOAD AND MUST BE REPLACED.

10. A FASTENER THAT SPLITS THE WOOD WILL NOT SUPPORT THE DESIGN LOAD. IF THE WOOD HAS A TENDENCY TO SPLIT, PRE-BORE HOLES TO ¾ OF THE NAIL DIAMETER (1997 NATIONAL DESIGN SPECIFICATION, 2.1.3.1)

VIII. WOOD STRUCTURAL PANELS

1. ALL WOOD STRUCTURAL PANEL SHEATHING SHALL CONFORM TO VOLUNTARY PRODUCT STANDARD PS-1 (DOC PS-1), VOLUNTARY PRODUCT STANDARD PS-2 (DOC PS-2), OR ANSI/APA PRP 210. WOOD STRUCTURAL PANELS PERMANENTLY EXPOSED TO OUTDOOR ENVIRONMENTS SHALL BE EXTERIOR TYPE. WOOD STRUCTURAL PANELS USED AS ROOF SHEATHING WITH ONLY THE UNDERSIDE OF THE PANEL BEING EXPOSED TO OUTDOOR ENVIRONMENTS MAY BE EXPOSURE 1 TYPE.

2. NAILS FOR WOOD SHEAR WALLS AND WOOD DIAPHRAGMS SHALL BE 8D COMMON NAILS, UNLESS NOTED OTHERWISE. NAILS SHALL BE INSTALLED IN ACCORDANCE WITH THE SHEAR WALL PLANS AND RELEVANT DETAILS.

3. WALL SHEATHING IN NON-SHEAR WALLS SHALL BE 7/16" OSB, MIN. WITH 8D COMMON NAILS INSTALLED WITH 6" MINIMUM EDGE SPACING AND 12" MINIMUM SPACING IN FIELD, TYP. UNLESS NOTED OTHERWISE.

4. WOOD STRUCTURAL PANEL SHEETS SHALL BE 4'x8' TYP., EXCEPT AT PANEL BOUNDARIES AND CHANGES IN FRAMING, TYP.

5. WOOD STRUCTURAL PANELS USED AS FLOOR SHEATHING SHALL BE 23/32" THICK T&G STYLE OSB, TYP. UNLESS NOTED OTHERWISE. WOOD STRUCTURAL PANELS USED AS ROOF SHEATHING SHALL BE 7/16" THICK OSB, TYP. UNLESS NOTED OTHERWISE. WOOD STRUCTURAL PANELS USED AS WALL SHEATHING SHALL BE 7/16" THICK OSB, TYP. UNLESS NOTED OTHERWISE.

6. REFER TO ROOF SHEATHING/ DIAPHRAGM DETAILS, FLOOR SHEATHING/ DIAPHRAGM DETAILS, AND WOOD SHEAR WALL PLANS AND DETAILS FOR ADDITIONAL NOTES AND REQUIREMENTS FOR WOOD STRUCTURAL PANELS, TYP.

STANDARD APA RATED SHEATHING	
PERFORMANCE CATEGORY	SPAN RATING
3/8	24/0
7/16	24/16
15/32	32/16
19/32	40/20
23/32	48/24

WALLS	PSF			
ZONES	AREA FT²			
	10		100	
4	34.1	-37.0	29.1	-31.9
5		-45.6		-35.4

ROOF	PSF			
ZONES	AREA FT²			
	10		100	
1	20.7	-63.0	13.9	-19.6
2		-91.8		-50.6
3		-109.1		-57.2

COMPONENTS & CLADDING PRESSURE TABLES

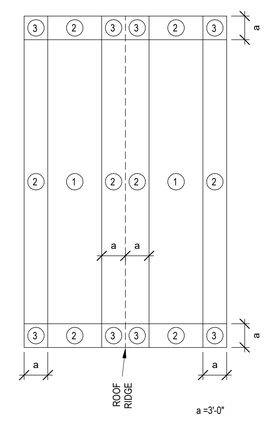

ROOF ZONES DIAGRAM

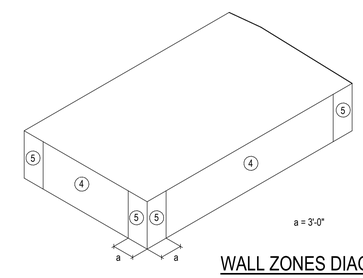

WALL ZONES DIAGRAM

DRYE McGLAMERY ENGINEERING, PLLC

NC FIRM LICENSE #P-1305

NORTH CAROLINA PROFESSIONAL SEAL 040795 ENGINEER JEFF WESTON DRYE

2025-04-02

No.	Description	Date
1	ISSUED FOR PROGRESS	2025-02-27
2	ISSUED FOR CONSTRUCTION	2025-04-02

BLUE RIDGE CONSERVANCY
RESTROOM
BOONE GORGE PARK
BOONE, NC 28607

DRYE-MCGLAMERY ENGINEERING, PLLC
325 McGILL AVENUE NW SUITE 115
CONCORD, NC 28027

ISSUED FOR CONSTRUCTION

DME PROJECT #: 2025045

DRAWN BY CJH

CHECKED BY HWD

GENERAL NOTES

S-0

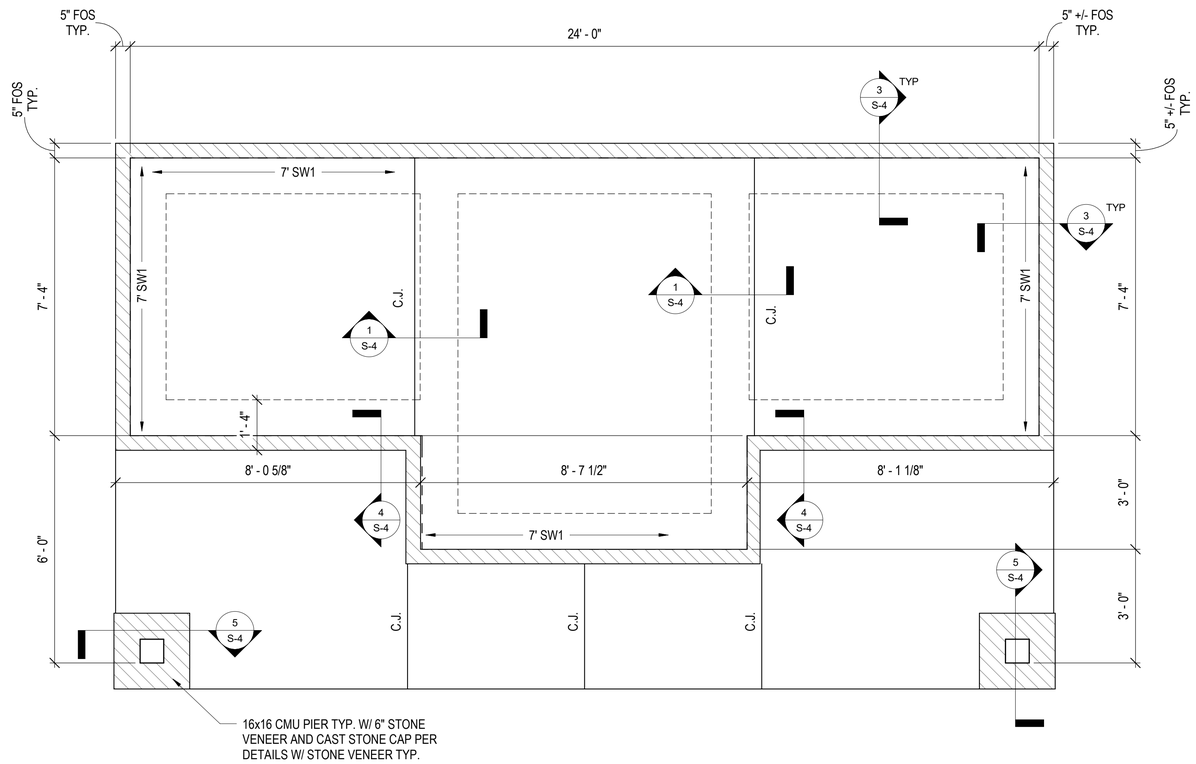

1 BATHROOM FOUNDATION PLAN
1/2" = 1'-0"

RESTROOM FOUNDATION NOTES:

1. DIMENSIONS ARE TO FACE OF STUD OR BRICK VENEER TYP.
2. REFERENCE ELEVATION +/-0'-0" SHALL BE TO TOP OF CONCRETE / FINISHED FLOOR TYP.
3. SLAB ON GRADE TO BE 4" THICK 3000 PSI CONCRETE TYP. ON 6 MIL VAPOR OVER 4" OF #57 WASH STONE TYP. SLAB TO BE REINFORCED WITH 6x6xW2.1xW2.1 WWF IN MIDDLE 1/3 OF SLAB.
4. REFER TO FOUNDATION DETAILS FOR THICKENED SLAB REQUIREMENTS,TYP. (SEE SHEET S-4).
5. T/SPREAD FOOTINGS AT POSTS SHALL BE -1'-0" TYP. U.N.O.
6. REINFORCE ALL CMU PIERS W/ #4 BARS EA. CELL TYP.
7. REFER TO FLOOR PLANS FOR BATHROOM LAYOUTS, MECH ROOM LAYOUTS, AND DOOR LOCATIONS TYP.
8. STUD WALLS SHALL BE 2x6 SPF NO. 1/2 AT 16' C/C MAX. TYP. PROVIDE DOUBLE BOTTOM PLATE ALL WALLS.
9. WALL SHEATHING TO BE 7/16" OSB FASTENED W/ 8D NAILS AT 6" C/C AT PANEL EDGES AND 6" C/C IN FIELD.
10. HEADERS IN STUD WALLS FOR DOORS SHALL BE (2) 2x8 MIN. TYP. WITH (1) JACK STUD AND (2) KING STUDS TYP.

C.J. DENOTES CONTRACTION JOINT TYP. SEE DETAIL FOR CONSTRUCTION REQUIREMENTS, TYP.

SW1 DENOTES SHEARWALL. SEE DETAILS AND SCHEDULE FOR REQUIREMENTS

DENOTES BRICK VENEER TYP. SPECS PER OWNER TYP.

DRYE McGLAMERY ENGINEERING, PLLC
NC FIRM LICENSE #P-1305

NORTH CAROLINA PROFESSIONAL SEAL 040795 ENGINEER HEATH WESTON DRYE 2025-04-02

No.	Description	Date
1	ISSUED FOR PROGRESS	2025-02-27
2	ISSUED FOR CONSTRUCTION	2025-04-02

BLUE RIDGE CONSERVANCY
RESTROOM
BOONE GORGE PARK
BOONE, NC 28607

DRYE-MCGLAMERY
ENGINEERING, PLLC
325 McGILL AVENUE NW SUITE 115
CONCORD, NC 28027

ISSUED FOR CONSTRUCTION

DME PROJECT #: 2025045
DRAWN BY CJH
CHECKED BY HWD

RESTROOM FOUNDATION PLAN

S-1

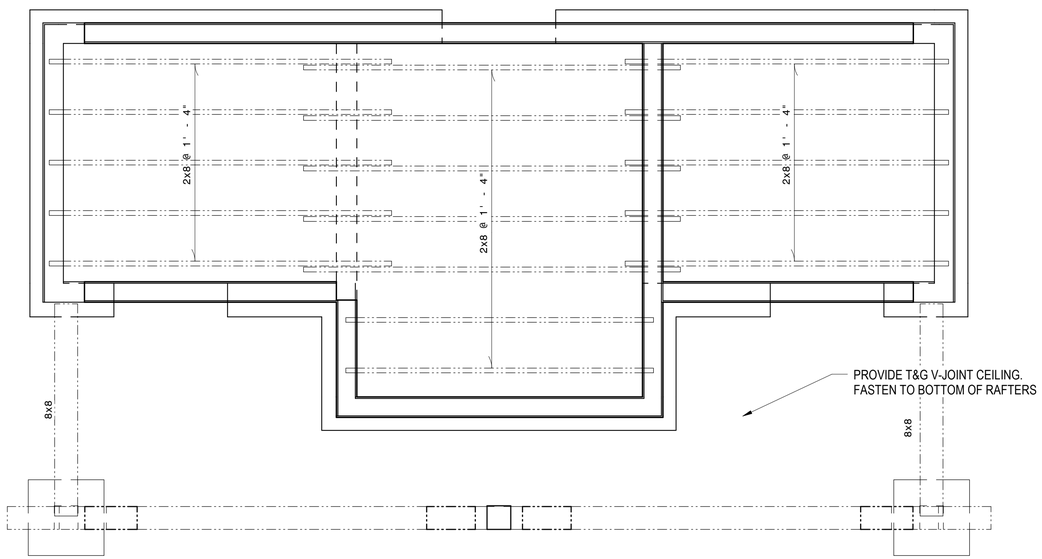

2 CEILING FRAMING PLAN
1/2" = 1'-0"

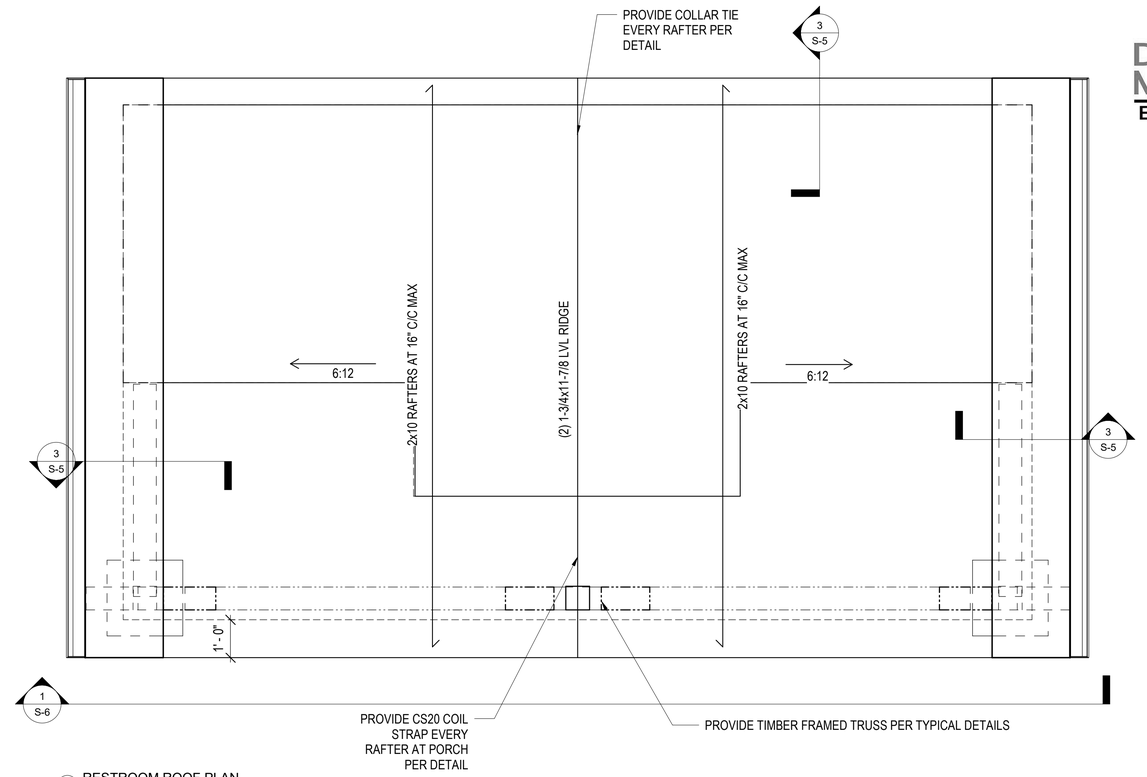

1 RESTROOM ROOF PLAN
1/2" = 1'-0"

ROOF FRAMING NOTES:

1. PLATE HEIGHT SHALL BE +8'-8" AFF TYP. UNO.
2. SEE PLAN FOR RAFTER SIZES.
3. SEE CONNECTION SCHEDULE FOR REQ. CONNECTIONS
4. PROVIDE 19/32" 40/20 OSB ROOF SHEATHING MIN. FASTEN W/ 12D NAILS AT 4" C/C AT PANEL EDGES AND 6" C/C IN FIELD TYP. MIN 1-3/8" NAIL PENETRATION INTO SUPPORTING MEMBERS TYP.
5. HEADERS IN STUD WALLS FOR DOORS SHALL BE (2) 2x8 MIN. TYP. WITH (1) JACK STUD AND (2) KING STUDS TYP.

DRYE McGLAMERY ENGINEERING, PLLC
NC FIRM LICENSE #P-1305

NORTH CAROLINA PROFESSIONAL SEAL 040795 ENGINEER HEATH WESTON DRYE
2025-04-02

No.	Description	Date
1	ISSUED FOR PROGRESS	2025-02-27
2	ISSUED FOR CONSTRUCTION	2025-04-02

BLUE RIDGE CONSERVANCY
RESTROOM
BOONE GORGE PARK
BOONE, NC 28607

DRYE-MCGLAMERY
ENGINEERING, PLLC
325 McGILL AVENUE NW SUITE 115
CONCORD, NC 28027

ISSUED FOR CONSTRUCTION

DME PROJECT #: 2025045
DRAWN BY CJH
CHECKED BY HWD

RESTROOM FRAMING PLANS

S-2

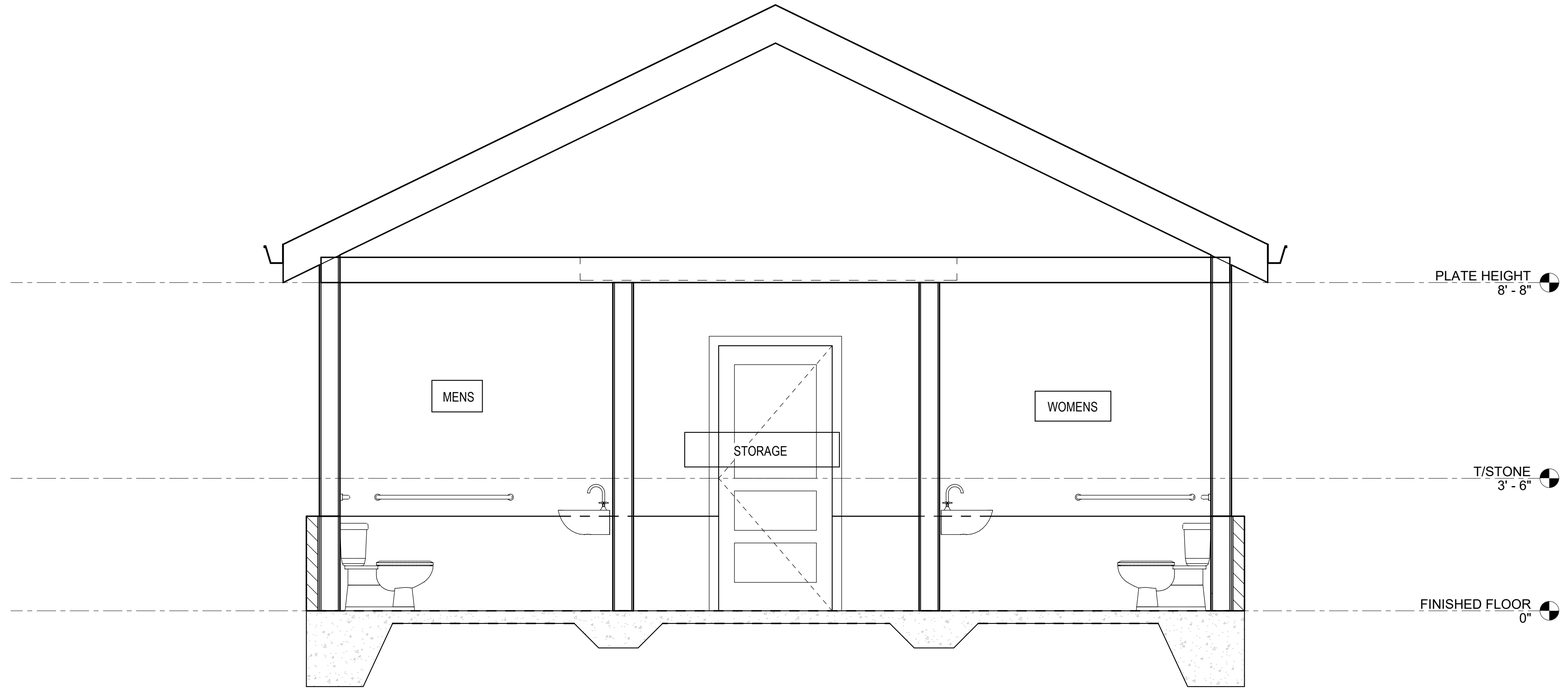

1 RESTROOM SECTION
1/2" = 1'-0"

DRYE McGLAMERY ENGINEERING, PLLC
NC FIRM LICENSE #P-1305

NORTH CAROLINA PROFESSIONAL SEAL 040795 ENGINEER HEATH WESTON DRYE
2025-04-02

No.	Description	Date
1	ISSUED FOR PROGRESS	2025-02-27
2	ISSUED FOR CONSTRUCTION	2025-04-02

BLUE RIDGE CONSERVANCY
RESTROOM
BOONE GORGE PARK
BOONE, NC 28607

DRYE-MCGLAMERY
ENGINEERING, PLLC
325 McGILL AVENUE NW SUITE 115
CONCORD, NC 28027

ISSUED FOR CONSTRUCTION

DME PROJECT #: 2025045

DRAWN BY CJH

CHECKED BY HWD

RESTROOM SECTIONS

S-3

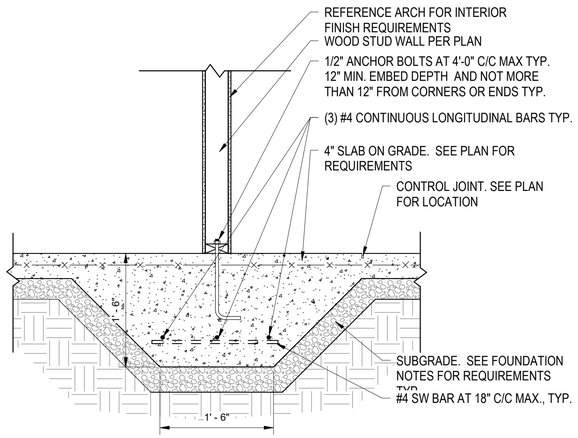

1 TYPICAL INTERIOR BEARING WALL FOUNDATION DETAIL
1" = 1'-0"

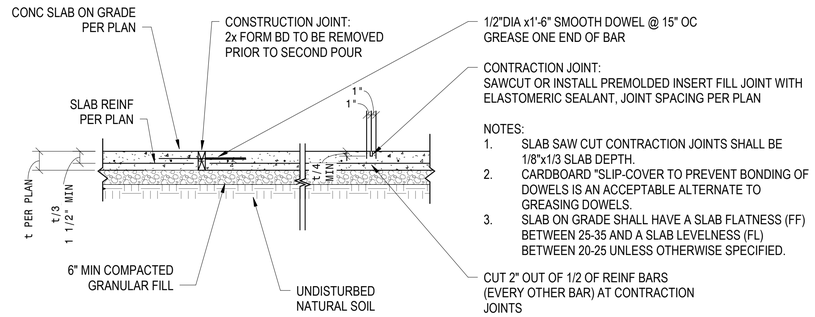

2 TYPICAL SLAB ON GRADE AND JOINT DETAIL
3/4" = 1'-0"

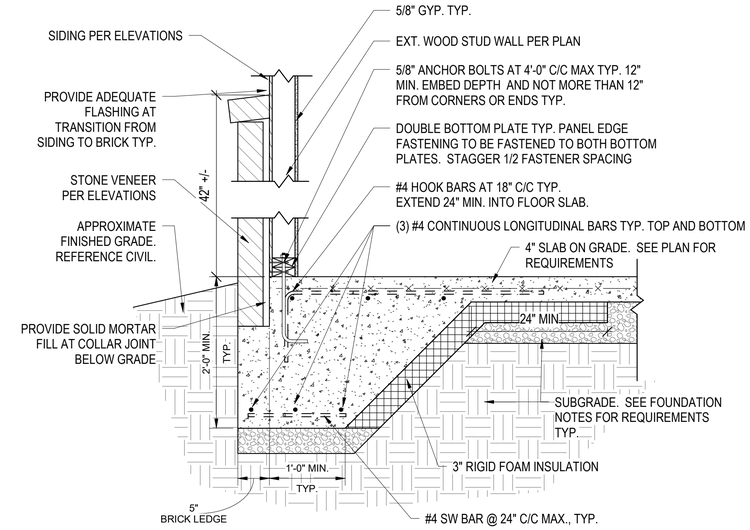

3 TYPICAL EXTERIOR FOUNDATION EDGE BRICK VENEER
1" = 1'-0"

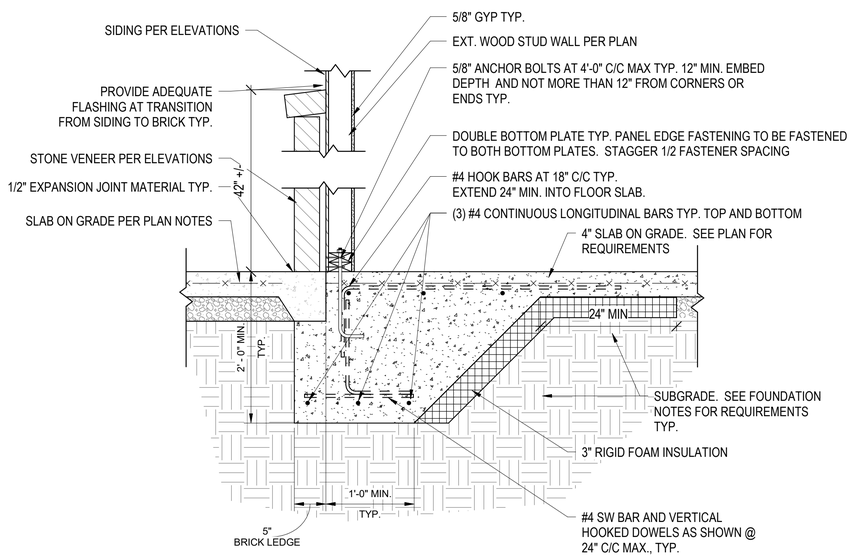

4 TYPICAL EXTERIOR FOUNDATION EDGE BRICK VENEER AT SLAB
1" = 1'-0"

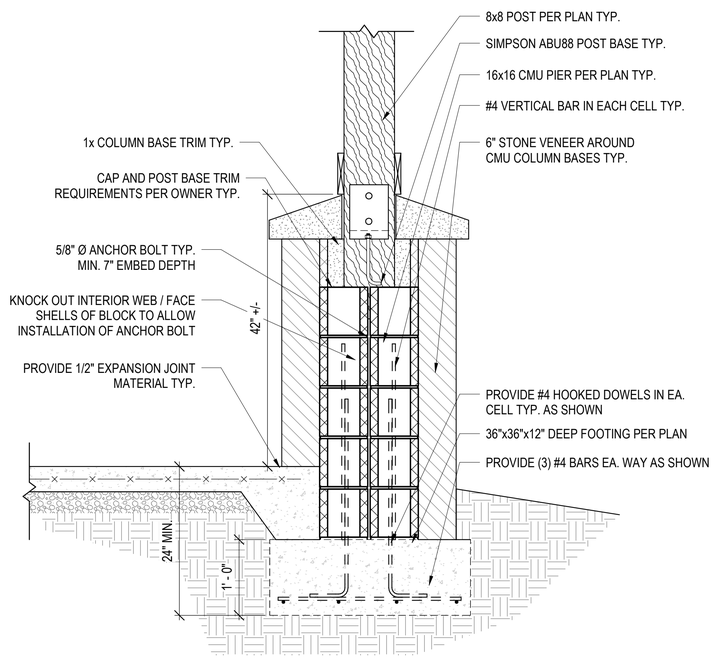

5 POST BEARING AT PIER
1" = 1'-0"

DRYE McGLAMERY ENGINEERING, PLLC
NC FIRM LICENSE #P-1305

NORTH CAROLINA PROFESSIONAL SEAL 040795 ENGINEER HEATH WESTON DRYE 2025-04-02

No.	Description	Date
1	ISSUED FOR PROGRESS	2025-02-27
2	ISSUED FOR CONSTRUCTION	2025-04-02

BLUE RIDGE CONSERVANCY
RESTROOM
BOONE GORGE PARK
BOONE, NC 28607

DRYE-MCGLAMERY ENGINEERING, PLLC
325 McGILL AVENUE NW SUITE 115
CONCORD, NC 28027

ISSUED FOR CONSTRUCTION

DME PROJECT #: 2025045
DRAWN BY CJH
CHECKED BY HWD

FOUNDATION DETAILS

S-4

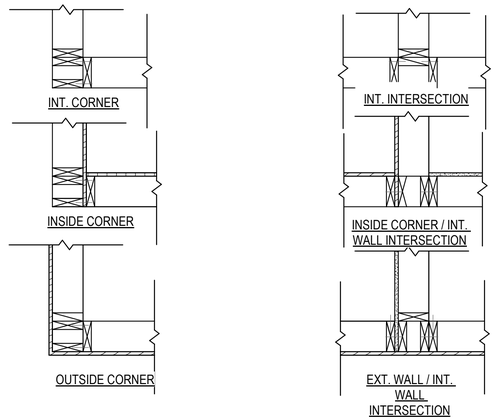

1 TYPICAL WALL FRAMING AT CORNER / INTERSECTION
3/4" = 1'-0"

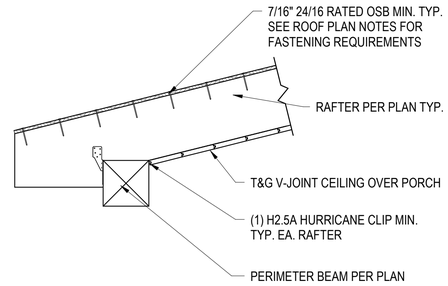

2 TYPICAL RAFTER TO PORCH BEAM CONNECTION DETAIL
1" = 1'-0"

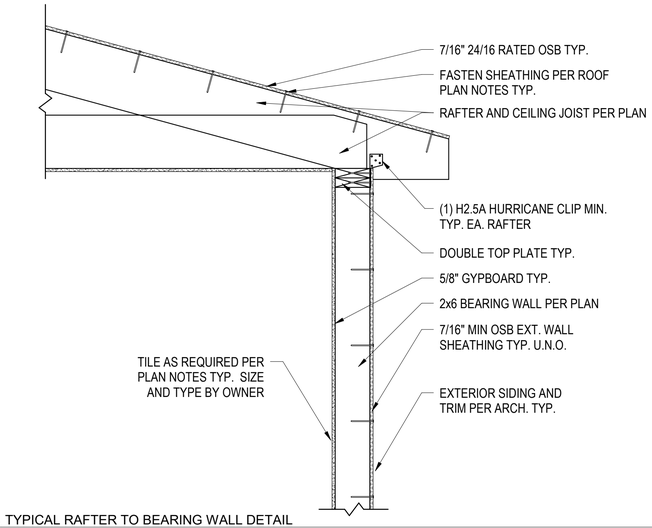

3 TYPICAL RAFTER TO BEARING WALL DETAIL
1" = 1'-0"

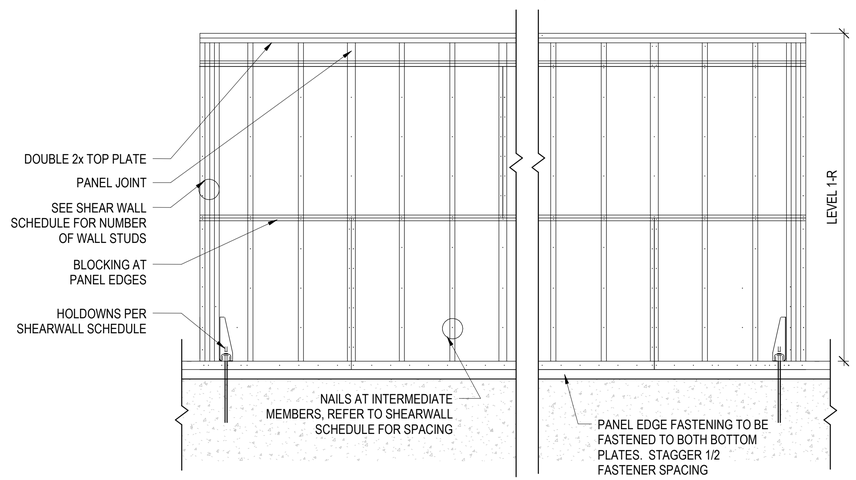

NOTES:

1. PLYWOOD/OSB SHEAR WALLS EXTEND UP TO THE BOTT. OF THE ROOF PLYWOOD/OSB DECK. INTERIOR SHEAR WALLS MAY STOP AT TOP PLATE WHERE TRUSSES ARE PERP. TO SHEAR WALL, PROVIDED TRUSSES ARE BLOCKED TO PREVENT ROLLOVER.
2. NAILS SHALL BE 8d COMMON (0.131"Ø) x 2" MIN. TO ACHIEVE 1-3/8" MIN. PENETRATION.
3. PLYWOOD/OSB SHALL BE 7/16" OR 15/32" OSB PANELS
4. HOLDOWNS SHOWN ARE FOR REFERENCE ONLY. REFERENCE SCHEDULE FOR DETAILS.
5. SHEAR WALL PENETRATIONS UP TO A 14"x14" SQUARE OPENING BETWEEN TWO WALL STUDS IS ALLOWED WITH BLOCKING AT ALL UNSUPPORTED PANEL EDGES. OPENINGS CANNOT BE WITHIN 1'-4" OF A SHEAR WALL EDGE AND OPENINGS CANNOT EXCEED 10% OF THE TOTAL SHEAR WALL AREA. OPENINGS EXCLUDE WINDOWS AND DOORS.
6. UP TO 3" THICK OF 2x FILLER WOOD (SPF #1/#2 OR BETTER) MAY BE USED AS A CUSHION FOR THE ALIGNMENT OF THE HOLD DOWN AND THE PAB IN THE SLAB TO THE SHEAR WALL END STUDS. CONTRACTOR TO PROVIDE LONGER STRUCTURAL STRUCTURAL SCREWS THAN SPECIFIED FOR HOLD DOWN TO ACCOMMODATE FOR ADDITIONAL CUSHION WIDTH. ADDITIONAL LENGTH OF SCREW TO BE ≥ CUSHION WIDTH.

4 SHEAR WALL ELEVATION - PLYWOOD ON WOOD STUDS
1" = 1'-0"

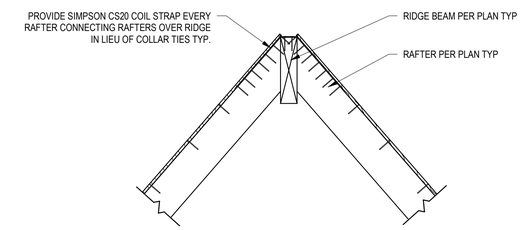

5 RIDGE BEAM DETAIL
3/4" = 1'-0"

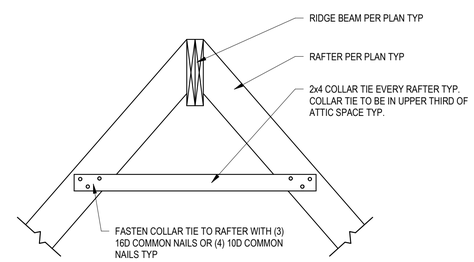

6 TYP COLLAR TIE DETAIL
3/4" = 1'-0"

SHEARWALL SCHEDULE

SW #1

LEVEL	SHEATHING MATERIAL	PANEL EDGE FASTENING SPACING	SIMPSON HOLDOWN DESIGNATION	HOLDOWN ANCHOR BOLTS	MIN. # STUDS AT SW ENDS	HD ANCHOR EMBEDMENT
1-R	7/16" OSB	6" C/C	HDU4-SDS2.5	1/2"Ø THRD ROD	2	8"

SHEAR WALL SCHEDULE NOTES:

1. OSB PANEL SHALL BE APPLIED OVER STUDS ON ONE SIDE OF WALL (U.N.O) PER SCHEDULE ABOVE.
2. ALL THREADED ROD, REFERENCED AS "THRD ROD" IN SCHEDULE, SHALL BE ASTM F1554 Gr. 36 TYP U.N.O
3. NAILING AT INTERMEDIATE MEMBERS TO BE SPACED AT 6" C/C
4. REF DETAIL FOR POSITIONING AND DETAILING OF SHEARWALL HOLDOWNS.
5. ALL NAILS TO BE 8d COMMON NAILS WITH 1 3/8" MIN. PENETRATION IN FRAMING.
6. SHEARWALL LENGTHS ARE SHOWN ON PLAN.

DRYE McGLAMERY ENGINEERING, PLLC
NC FIRM LICENSE #P-1305

NORTH CAROLINA PROFESSIONAL SEAL 040795 ENGINEER HEATH WESTON DRYE 2025-04-02

No.	Description	Date
1	ISSUED FOR PROGRESS	2025-02-27
2	ISSUED FOR CONSTRUCTION	2025-04-02

BLUE RIDGE CONSERVANCY
RESTROOM
BOONE GORGE PARK
BOONE, NC 28607

DRYE-MCGLAMERY ENGINEERING, PLLC
325 McGILL AVENUE NW SUITE 115
CONCORD, NC 28027

ISSUED FOR CONSTRUCTION

DME PROJECT #: 2025045
DRAWN BY CJH
CHECKED BY HWD

FRAMING DETAILS

S-5

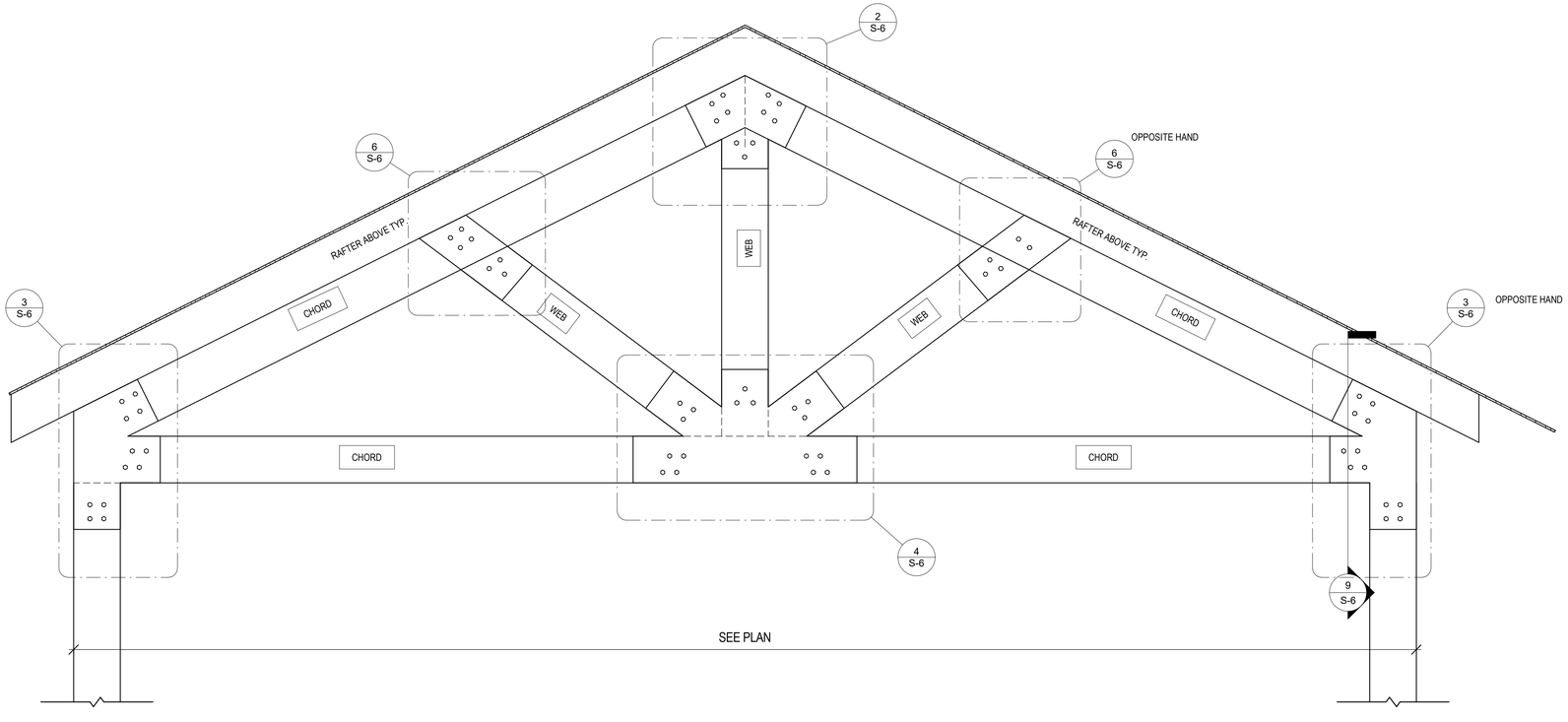

1 GABLE TRUSS ELEVATION
3/4" = 1'-0"

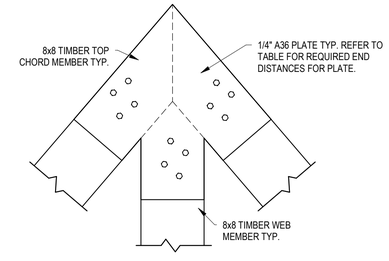

2 TIMBER TRUSS CONNECTION 3
1" = 1'-0"

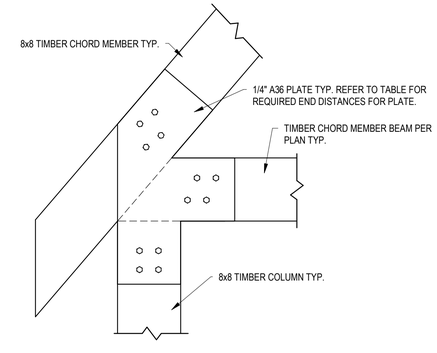

3 TIMBER TRUSS CONNECTION 4
1" = 1'-0"

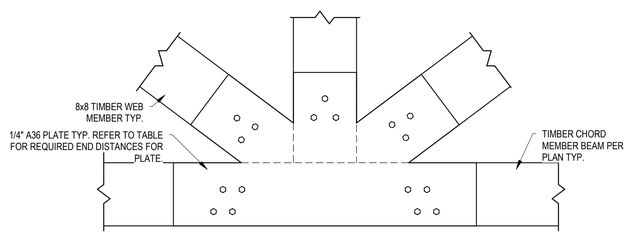

4 TIMBER TRUSS CONNECTION 1
1" = 1'-0"

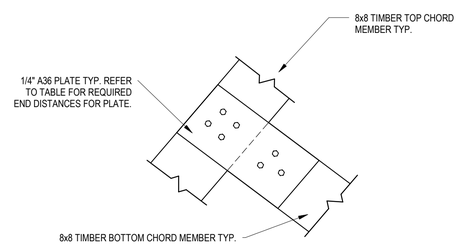

6 TIMBER TRUSS CONNECTION 2
1" = 1'-0"

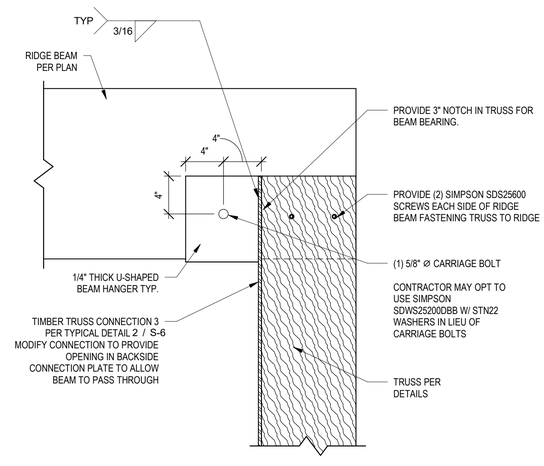

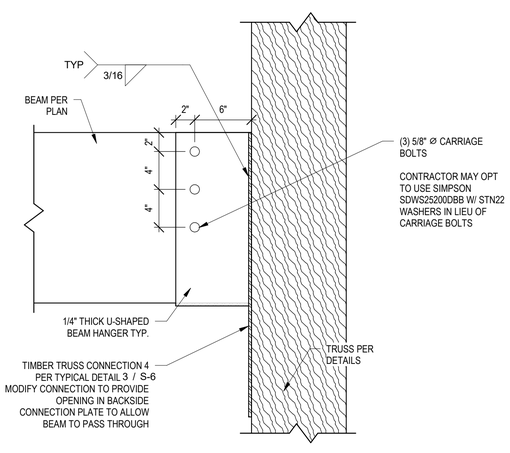

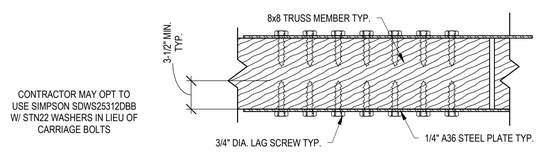

TYPICAL TRUSS CONNECTION

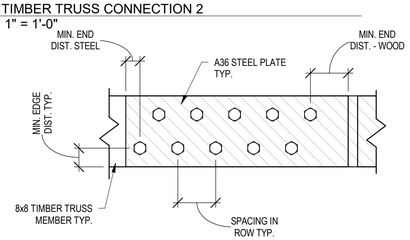

TYPICAL TRUSS CONNECTION SPACINGS

5 TYP TRUSS CONNECTION
1 1/2" = 1'-0"

7 TRUSS CONNECTION SPACING
1 1/2" = 1'-0"

8 RIDGE BEAM CONNECTION TO TRUSS
1 1/2" = 1'-0"

9 PORCH BEAM HANGER CONNECTION TO TRUSS
1 1/2" = 1'-0"

DRYE McGLAMERY ENGINEERING, PLLC
NC FIRM LICENSE #P-1305

NORTH CAROLINA PROFESSIONAL SEAL 040795 ENGINEER HEATH WESTON DRYE 2025-04-02

No.	Description	Date
1	ISSUED FOR PROGRESS	2025-02-27
2	ISSUED FOR CONSTRUCTION	2025-04-02

BLUE RIDGE CONSERVANCY
RESTROOM
BOONE GORGE PARK
BOONE, NC 28607

DRYE-MCGLAMERY
ENGINEERING, PLLC
325 McGILL AVENUE NW SUITE 115
CONCORD, NC 28027

ISSUED FOR CONSTRUCTION

DME PROJECT #: 2025045
DRAWN BY CJH
CHECKED BY HWD

TIMBER TRUSS DETAILS

S-6

FASTENER SCHEDULE - WALL FRAMING (A,E,F)

2018 NCBC - TABLE 2304.10

DESCRIPTION OF BUILDING ELEMENTS/ CONNECTION TYPE (B)	FASTENER MIN. LENGTH AND TYPE (INCHES)	QUANTITY OR SPACING BETWEEN FASTENERS (INCHES O.C.)
TOP OR SOLE PLATE TO STUD (FACE NAIL)	3-1/2" X 0.162" NAIL (16D COMMON NAIL) (C)	2
	3" X 0.148" NAIL (10D COMMON NAIL)	3
STUD TO TOP OR SOLE PLATE (TOE NAIL)	2-1/2" X 0.131" NAIL (8D COMMON NAIL) (C)	4
	3-1/2" X 0.162" NAIL (16D COMMON NAIL)	3
	3" X 0.148" NAIL (10D COMMON NAIL)	4
CAP/TOP PLATE LAPS AND INTERSECTIONS	3-1/2" X 0.162" NAIL (16D COMMON NAIL) (C)	2 EA. SIDE OF LAP
DIAGONAL BRACING	2-1/2" X 0.131" NAIL (8D COMMON NAIL) (C)	2
	3-1/2" X 0.162" NAIL (16D COMMON NAIL)	2
	3" X 0.148" NAIL (10D COMMON NAIL)	2
SOLE PLATE TO JOIST OR BLOCKING AT BRACED PANELS	3-1/2" X 0.135" NAIL (16D BOX NAIL) (C)	3 PER 16" SPACE
	3-1/2" X 0.162" NAIL (16D COMMON NAIL)	2 PER 16" SPACE
	3" X 0.148" NAIL (10D COMMON NAIL)	3 PER 16" SPACE
SOLE PLATE TO JOIST OR BLOCKING	3-1/2" X 0.162" NAIL (16D COMMON NAIL) (C)	16 INCHES O.C.
	3" X 0.148" NAIL (10D COMMON NAIL)	8 INCHES O.C.
DOUBLE TOP PLATE	3" X 0.148" NAIL (10D COMMON NAIL) (C)	16 INCHES O.C.
	3-1/2" X 0.162" NAIL (16D COMMON NAIL)	16 INCHES O.C.
DOUBLE STUDS	3" X 0.148" NAIL (10D COMMON NAIL) (C)	12 INCHES O.C.
	3-1/2" X 0.162" NAIL (16D COMMON NAIL)	12 INCHES O.C.
CORNER STUDS	3-1/2" X 0.162" NAIL (16D COMMON NAIL) (C)	24 INCHES O.C.
	3" X 0.148" NAIL (10D COMMON NAIL)	16 INCHES O.C.

FASTENER SCHEDULE - CEILING AND ROOF FRAMING (A,E)

2018 NCBC - TABLE 2304.10

DESCRIPTION OF BUILDING ELEMENTS/ CONNECTION TYPE (B)	FASTENER MIN. LENGTH AND TYPE (INCHES)	QUANTITY OR SPACING BETWEEN FASTENERS (INCHES O.C.)
CEILING JOIST TO PLATE	3-1/2" X 0.162" NAIL (16D COMMON NAIL) (C)	3
	3" X 0.148" NAIL (10D COMMON NAIL)	4
CEILING JOIST, LAPS OVER PARTITIONS & CEILING JOIST TO PARALLELL RAFTER	3-1/2" X 0.162" NAIL (16D COMMON NAIL) (C)	3
	3" X 0.148" NAIL (10D COMMON NAIL)	4
COLLAR TIE TO RAFTER	3" X 0.148" NAIL (10D COMMON NAIL) (C)	3
	3-1/2" X 0.162" NAIL (16D COMMON NAIL)	3
JACK RAFTER TO HIP, TOE-NAILED	3" X 0.148" NAIL (10D COMMON NAIL) (C)	3
	3-1/2" X 0.162" NAIL (16D COMMON NAIL)	3
JACK RAFTER TO HIP, FACE NAILED	3-1/2" X 0.162" NAIL (16D COMMON NAIL) (C)	2
	3" X 0.148" NAIL (10D COMMON NAIL)	3
ROOF RAFTER TO PLATE (TOE-NAILED)	2-1/2" X 0.131" NAIL (8D COMMON NAIL) (C)	3
	3-1/2" X 0.162" NAIL (16D COMMON NAIL)	3
	3" X 0.148" NAIL (10D COMMON NAIL)	3
ROOF RAFTER TO 2-BY RIDGE BEAM, FACE NAILED	3-1/2" X 0.162" NAIL (16D COMMON NAIL) (C)	2
	3" X 0.148" NAIL (10D COMMON NAIL)	3
ROOF RAFTER TO 2-BY RIDGE BEAM, TOE-NAILED	3-1/2" X 0.162" NAIL (16D COMMON NAIL) (C)	2
	3" X 0.148" NAIL (10D COMMON NAIL)	3

FASTENER SCHEDULE - FLOOR FRAMING (A,E)

2018 NCBC - TABLE 2304.10

DESCRIPTION OF BUILDING ELEMENTS/ CONNECTION TYPE (B)	FASTENER MIN. LENGTH AND TYPE (INCHES)	QUANTITY OR SPACING BETWEEN FASTENERS (INCHES O.C.)
JOIST TO BAND JOIST	3-1/2" X 0.162" NAIL (16D COMMON NAIL) (C)	3
	3" X 0.148" NAIL (10D COMMON NAIL)	5
LEDGER STRIP	3-1/2" X 0.162" NAIL (16D COMMON NAIL) (C)	3
	3" X 0.148" NAIL (10D COMMON NAIL)	4
JOIST TO SILL OR GIRDER TOE-NAILED & BLOCKING BETWEEN JOIST OR RAFTER TO TOP PLATE (TOE-NAILED)	2-1/2" X 0.131" NAIL (8D COMMON NAIL) (C)	3
	3" X 0.148" NAIL (10D COMMON NAIL)	3
BRIDGE TO JOIST (LISTED NUMBER OF FASTENERS AT EACH END)	2-1/2" X 0.131" NAIL (8D COMMON NAIL) (C)	2
RIM JOIST TO TOP PLATE (TOE-NAILED)	3-1/2" X 0.162" NAIL (16D COMMON NAIL)	8" O.C.
	3" X 0.148" NAIL (10D COMMON NAIL)	6" O.C.
BUILT-UP GIRDERS AND BEAMS	3-1/2" X 0.162" NAIL (16D COMMON NAIL)	24" O.C. AND 3 AT EA. END AND SPLICE
	3" X 0.148" NAIL (10D COMMON NAIL)	24" O.C. AND 3 AT EA. END AND SPLICE
	2-1/2" X 0.131" NAIL (8D COMMON NAIL)	16" O.C. AND 4 AT EA. END AND SPLICE

FASTENER SCHEDULE - STRUCTURAL MEMBERS (J,K)

2018 NCBC - TABLE 2304.10

DESCRIPTION OF BUILDING ELEMENTS/ CONNECTION TYPE (B)	FASTENER MIN. LENGTH AND TYPE (INCHES)	SPACING OF FASTENERS	
		EDGES (INCHES) (I)	INTERMEDIATE SUPPORTS (INCHES) (C,E)
WOOD STRUCTURAL PANELS, SUBFLOOR, ROOF AND INTERIOR WALL SHEATHING TO FRAMING AND PARTICLEBOARD WALL SHEATHING TO FRAMING			
3/8" TO 1/2"	6D COMMON NAIL (SUBFLOOR WALL)	6	12 (G)
	8D COMMON NAIL (ROOF) (F)	6	12 (G)
19/32" TO 1"	8D COMMON NAIL	6	12 (G)
1-1/8" TO 1-1/4"	10D COMMON NAIL	6	12
	8D DEFORMED NAIL	6	12
OTHER WALL SHEATHING (H)			
1/2" STRUCTURAL CELLULOSIC FIBERBOARD SHEATHING	1-1/2" GALVANIZED ROOFING NAIL, 7/16" CROWN OR 1" CROWN STAPLE 16 GA., 1-1/4" LONG	3	6
25/32" STRUCTURAL CELLULOSIC FIBERBOARD SHEATHING	1-3/4" GALVANIZED ROOFING NAIL, 7/16" CROWN OR 1" CROWN STAPLE 16 GA., 1-1/2" LONG	3	6
1/2" GYPSUM SHEATHING (D)	1-1/2" GALVANIZED ROOFING NAIL, STAPLE GALVANIZED, 1-1/2 LONG; 1-1/4" SCREWS, TYPE W OR S	7	7
5/8" GYPSUM SHEATHING (D)	1-3/4" GALVANIZED ROOFING NAIL, STAPLE GALVANIZED, 1-5/8 LONG; 1-5/8" SCREWS, TYPE W OR S	7	7
WOOD STRUCTURAL PANELS, COMBINATION SUBFLOOR UNDERLAYMENT TO FRAMING			
3/4" AND LESS	6D DEFORMED NAIL	6	12
	8D COMMON NAIL	6	12
7/8" T0 1"	8D COMMON NAIL	6	12
	8D DEFORMED NAIL	6	12
1-1/8" TO 1-1/4"	10D COMMON NAIL	6	12
	8D DEFORMED NAIL	6	12

NOTES TO TABLE 2304.10 - WALL FRAMING, CEILING AND ROOF FRAMING, AND FLOOR FRAMING SCHEDULES

(A). THIS FASTENING SCHEDULE APPLIES TO FRAMING MEMBERS HAVING AN ACTUAL THICKNESS OF 1-1/2" INCHES (NOMINAL "2X" LUMBER)

(B). FASTENINGS LISTED ABOVE MAY ALSO BE USED FOR OTHER CONNECTIONS THAT ARE NOT LISTED BUT THAT HAVE THE SAME CONFIGURATION AND THE SAME CODE REQUIREMENTS FOR FASTENER QUANTITY/SPACING AND FASTENER SIZE (PENNYWEIGHT AND STYLE, E.G. 8D COMMON, "8-PENNY COMMON NAIL")

(C). THIS FASTENER, IN THE QUANTITY OR SPACING SHOWN IN THE RIGHTMOST COLUMN, COMPRISES THE MOST STRINGENT FASTENING OF THE CONNECTION LISTED IN THE *INTERNATIONAL RESIDENTIAL CODE*.

(D). FASTENING SCHEDULE ONLY APPLIES TO BUILDINGS OF CONVENTIONAL WOOD FRAME CONSTRUCTION WHERE WIND OR SEISMIC ANALYSIS IS NOT REQUIRED BY THE APPLICABLE CODE. IN AREAS WHERE WIND OR SEISMIC ANALYSIS IS REQUIRED, REQUIRED FASTENING MUST BE DETERMINED BY STRUCTURAL ANALYSIS. THE FOLLOWING ARE CONDITIONS FOR WHICH CODES REQUIRE STRUCTURAL ANALYSIS:

i. FOR NOMINAL DIMENSIONS OF NAILS SEE 2018 NCBC TABLE 2304.10

ii. BUILDINGS LOCATED IN AREAS WHERE THE DESIGN WIND SPEED EXCEEDS 130 MPH OR AREAS ASSIGNED TO SEISMIC CATEGORY C

(E). REPRINTED BY PERMISSION OF THE ICC EVALUATION SERVICE LCC. FROM EVALUATION REPORT ESR-1539-09.

(F). NAILS AND STAPLES SHALL CONFORM TO THE REQUIREMENTS OF ASTM F1667.

NOTES TO TABLE 2304.10 - STRUCTURAL MEMBERS SCHEDULE

(A). DELETED

(B). STAPLES ARE 16 GAGE WIRE AND HAVE A MIN. 7/16 INCH ON DIAMETER CROWN WIDTH

(C). NAILS SHALL BE SPACED AT NOT MORE THAN 6 INCHES ON CENTER AT ALL SUPPORTS WHERE SPANS ARE 48 INCHES OR GREATER

(D). FOUR FOOT BY 8-FOOT OR 4-FOOT BY 9-FOOT PANELS SHALL BE APPLIED VERTICALLY

(E). SPACING OF FASTENERS NOT INCLUDED IN THIS TABLE SHALL BE BASED ON TABLE 2304.10.

(F). FOR REGIONS HAVING ULTIMATE WIND SPEED OF 130 MPH OR GREATER, 8D DEFORMED NAILS SHALL BE USED FOR ATTACHING PLYWOOD AND WOOD STRUCTURAL PANEL ROOF SHEATHING TO FRAMING WITHIN MINIMUM 48-INCH DISTANCE FROM GABLE END WALLS, IF MEAN ROOF HEIGHT IS MORE THAN 25 FEET, UP TO 35 FEET MAXIMUM.

(G). FOR REGIONS HAVING ULTIMATE WIND SPEED OF 120 MPH OR LESS, NAILS FOR ATTACHING WOOD STRUCTURAL PANEL ROOF SHEATHING TO GABLE END WALL FRAMING SHALL BE SPACED 6 INCHES ON CENTER. WHEN BASIC WIND SPEED IS GREATER THAN 100 MPH, NAILS FOR ATTACHING PANEL ROOF SHEATHING TO INTERMEDIATE SUPPORTS SHALL BE SPACED 6 INCHES ON CENTER FOR MINIMUM 48-INCH DISTANCE FROM RIDGES, EAVES AND GABLE END WALLS, AND 4 INCHES ON CENTER TO GABLE END WALL FRAMING.

(H). GYPSUM SHEATHING SHALL CONFORM TO ASTM C79 AND SHALL BE INSTALLED IN ACCORDANCE WITH GA 253. FIBERBOARD SHEATHING SHALL CONFORM TO ASTM C208.

(I). SPACING OF FASTENERS ON FLOOR SHEATHING, PANEL EDGES APPLIES TO PANEL EDGES SUPPORTED BY FRAMING MEMBERS AND REQUIRED BLOCKING AND AT ALL FLOOR PERIMETERS ONLY. SPACING OF FASTENERS ON ROOF SHEATHING, PANEL EDGES APPLIES TO PANEL EDGES SUPPORTED BY FRAMING MEMBERS AND REQUIRED BLOCKING. BLOCKING OF ROOF OR FLOOR SHEATHING PANEL EDGES PERPENDICULAR TO THE FRAMING MEMBERS NEED NOT BE PROVIDED EXCEPT AS REQUIRED BY OTHER PROVISIONS OF THIS CODE. FLOOR PERIMETER SHALL BE SUPPORTED BY FRAMING MEMBERS OR SOLID BLOCKING. ROOF SHEATHING 7/16 INCH OR GREATER IN THICKNESS DOES NOT REQUIRE PERIMETER BLOCKING.

(J). FOR NOMINAL DIMENSIONS OF NAILS SEE TABLE 2304.10

(K). NAILS AND STAPLES SHALL CONFORM TO THE REQUIREMENTS OF ASTM F1667.

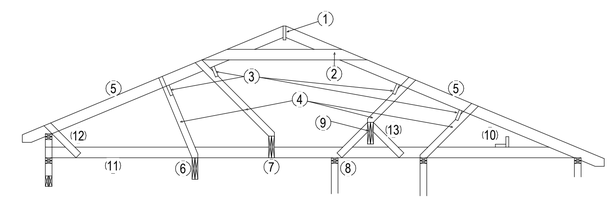

TYPICAL ROOF BRACING DETAILS

NOTES: APPLY UNLESS NOTED OTHERWISE ON STRUCTURAL DRAWINGS.

1. RIDGE MUST BE MINIMUM 1" NOMINAL THICKNESS AND MINIMUM HT EQUAL OR GREATER THAN THE END CUT ON RAFTER.
2. COLLAR TIES PLACED AT THE UPPER 1/3 AND SIZED EQUAL OR GREATER THAN THE RAFTER SPACED AT NO MORE THAN 4' OC.
3. PURLIN EQUIAL OR GREATER THAN THE SIZE OF THE RAFTER AND INSTALLED ON EDGE. LOCATION GIVEN ON DRAWINGS.
4. PURLIN BRACES MINIMUM 2X4 AND SLOPED NO GREATER THAN 45 DEGREES.
5. RAFTER SIZED BY THE DRAWINGS.
6. DROP BEAM.
7. FLUSH BEAM.
8. DBL TOP PLATED WALL.
9. RAISED BEAM. (6, 7, 8, AND 9 ARE ACCEPTABLE MEANS OF ROOF SUPPORT.)
10. STRONG BACK WITH EACH MEMBER EQUAL OR GREATER THAN CEILING JOIST REQUIRED ON SPANS GREATER THAN 10'.
11. CEILING JOIST SIZED BY THE DRAWINGS.
12. 2X4 RAFTER TIES BRACE AT 4' OC WHERE REQUIRED.
13. 2X4 BACK BRACE AT 4' OC CONTINUOUS EACH SIDE.

POST BASE SCHEDULE

POST SIZE	SIMPSON EMBEDDED POST BASE	SIMPSON BOLTED POST BASE
4X4	CB44	ABU44
6X6	CB66	ABU66
8X8	CB88	ABU88

DRYE McGLAMERY ENGINEERING, PLLC
NC FIRM LICENSE #P-1305

NORTH CAROLINA PROFESSIONAL SEAL 040795 ENGINEER HEATH WESTON DRYE 2025-04-02

No.	Description	Date
1	ISSUED FOR PROGRESS	2025-02-27
2	ISSUED FOR CONSTRUCTION	2025-04-02

BLUE RIDGE CONSERVANCY
RESTROOM
BOONE GORGE PARK
BOONE, NC 28607

DRYE-MCGLAMERY
ENGINEERING, PLLC
325 McGILL AVENUE NW SUITE 115
CONCORD, NC 28027

ISSUED FOR CONSTRUCTION

DME PROJECT #: 2025045

DRAWN BY CJH

CHECKED BY HWD

FRAMING DETAILS

S-7

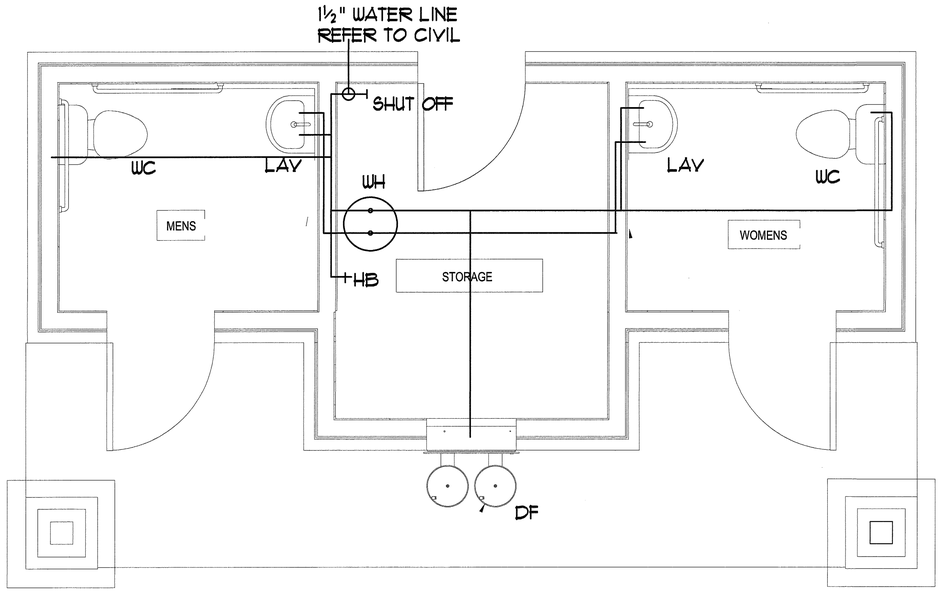

1 / P-01 SUPPLY PLUMBING PLAN
SCALE 1/2" - 1'0"

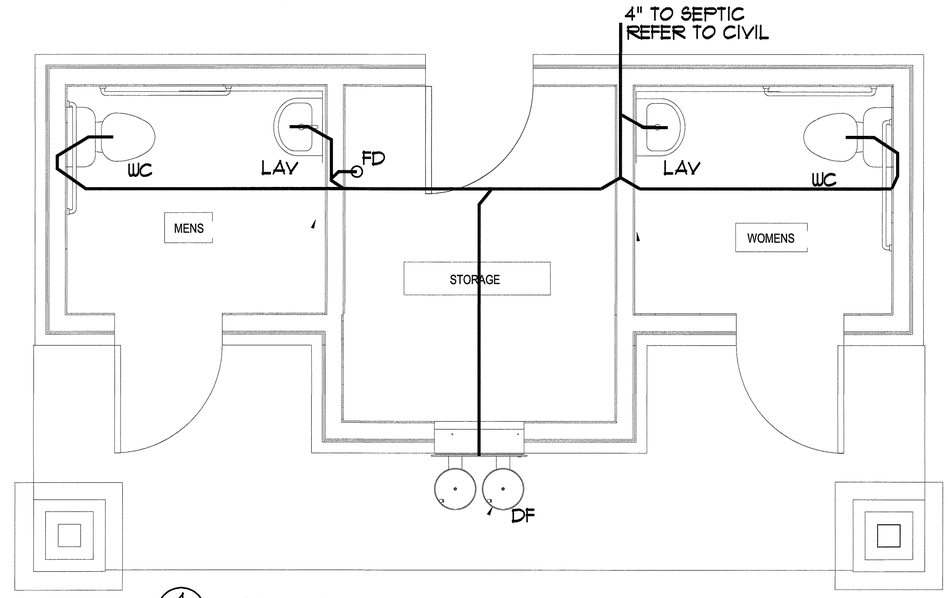

4 / P-01 WASTE PLUMBING PLAN
SCALE 1/2" - 1'0"

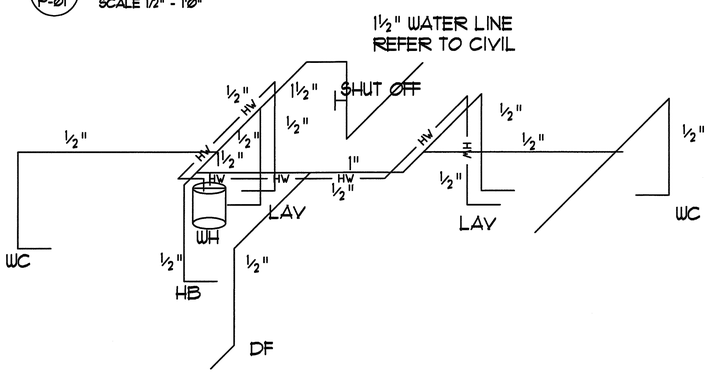

2 / P-01 SUPPLY DIAGRAM

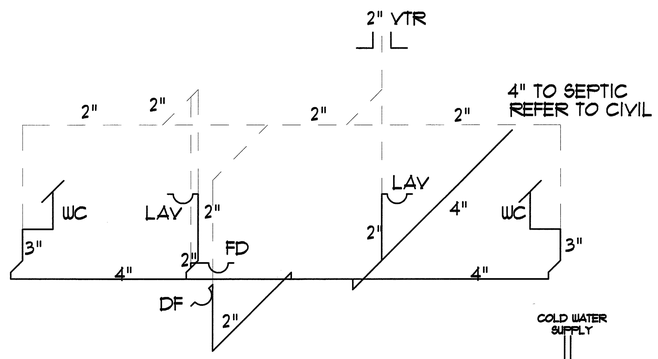

5 / P-01 WASTE DIAGRAM

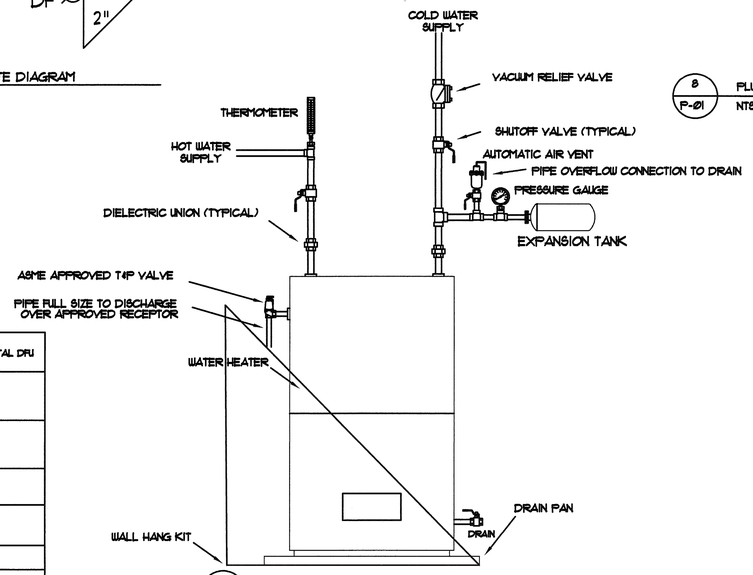

6 / P-01 TYPICAL WATER HEATER DETAIL
NTS

7 / P-01 MATERIAL SPECIFICATION

1) PIPE INSULATION: DG TURBOLIT FOAM
VINYL JACKETED WHERE EXPOSED
2) WASTE: CAST / PVC
3) VENT: CAST / PVC
4) DOMESTIC WATER: PEX/COPPER/STAINLESS

8 / P-01 PLUMBING NOTES
NTS

1. THE PLUMBING CONTRATOR SHALL PROVIDE ALL LABOR, MATERIAL, AND EQUIPMENT REQUIRED FOR THE COMPLETION AND OPERATION OF ALL SYSTEMS IN THIS SECTION OF WORK IN ACCORDANCE WITH THE APPROVED EDITIONS OF THE 2018 NC PLUMBING CODE, THE LOCAL ADMINISTRATIVE AUTHORITY AND APPLICABLE NFPA CODES. INSULATE DOMESTIC COLD & HOT WATER PIPING. PATCH EXISTING INSULATION WHERE DAMAGED UNDER CONSTRUCTION AND WHERE NEW CONNECTIONS ARE MADE.
2. THE CONTRACTOR SHALL APPLY AND PAY FOR ALL NECESSARY PERMITS, FEES, AND INSPECTIONS REQUIRED BY ANY PUBLIC AUTHORITY HAVING JURISDICTION. ACREAGE CHARGES, BONDS, PROPERTY ASSESSMENTS AND FACILITIES CHARGE SHALL NOT BE CONSTRUED TO BE A PART OF THIS
3. ALL MATERIALS AND EQUIPMENT PROVIDED AND/OR INSTALLED UNDER THIS SECTION OF THE SPECIFICATIONS SHALL BE GUARANTEED FOR A PERIOD OF 1 YEAR FROM THE DATE OF TURNOVER OF THE WORK TO THE OWNER.
4. THE PLUMBING CONTRACTOR SHALL COORDINATE WORK WITH THE CONTRACTORS OF OTHER TRADES, AND COMPLETE THE ENTIRE INSTALLATION AS SOON AS THE CONDITIONS OF THE BUILDING PERMITS.
5. FIRESTOP ALL PENETRATIONS, BY PIPING OR CONDUITS, OF FIRE RATED WALLS, FLOORS AND PARTITIONS. PROVIDE A DEVICE(S) OR SYSTEM(S) WHICH HAS BEEN TESTED AND LISTED AS COMPLYING WITH ASTM E-814. INSTALL THE DEVICE(S) OR SYSTEM(S) IN ACCORDANCE WITH THE CONDITIONS OF THEIR LISTING. PROVIDE A DEVICE(S) OR SYSTEM(S).
6. ALL PLUMBING FIXTURES ARE TO BE EQUIPPED WITH WATER HAMMER ARRESTORS AS PER 2018 NC PLUMBING CODE 604.9. PLUMBING CONTRACTOR AND GENERAL CONTRACTOR TO VERIFY
7. ALL PLUMBING MATERIALS USED WILL COMPLY WITH THE 2018 NC PLUMBING CODE.
   A) ANY ABOVE-GROUND DRAINAGE AND VENT PIPING SHALL COMPLY WITH SECTION 702.1
   B) ANY UNDERGROUND SANITARY DRAINAGE AND VENT PIPING SHALL COMPLY WITH SECTION 702.2
   C) ANY WATER SERVICE PIPE SHALL COMPLY WITH SECTION 605.3
   D) ANY WATER DISTRIBUTION PIPE SHALL COMPLY WITH SECTION 605.4.
8. PROVIDE ALL MATERIALS AND EQUIPMENT AND PERFORM ALL LABOR REQUIRED TO INSTALL COMPLETE AND OPERABLE PLUMBING SYSTEMS AS INDICATED ON THE DRAWINGS, SPECIFIED AND AS REQUIRED BY CODE. REFER TO ARCHITECT/ENGINEER FOR ANY QUESTIONS OF INTENT OR DISCREPANCIES OR CONFLICTING INFORMATION.
9. THE CONTRACTOR SHALL NOTIFY THE ENGINEER OF ANY MATERIALS, EQUIPMENT, OR CONFIGURATION BELIEVED TO BE INADEQUATE, UNSUITABLE, IN VIOLATION OF LAWS, ORDINANCES, RULES, OR REGULATIONS OF AUTHORITIES HAVING JURISDICTION PRIOR TO INSTALLATION.
10. THE CONTRACTOR SHALL CAREFULLY EXAMINE THE CONTRACT DOCUMENTS, VISIT THE SITE, AND BECOME THOROUGHLY FAMILIAR WITH THE BUILDING STANDARDS AND LOCAL CONDITIONS RELATING TO THE WORK PRIOR TO SUBMITTING THE BID PROPOSAL. FAILURE TO DO SO SHALL NOT RELIEVE THE CONTRACTOR OF THE OBLIGATIONS OF THE CONTRACT. IDENTIFY ALL DISCREPANCIES TO THE ENGINEER. THERE SHALL BE NO EXTRA CHARGES ACCEPTED FOR THE WORK THAT HAS TO BE PERFORMED DUE TO THE CONTRACTOR'S NEGLIGENCE TO VERIFY THE EXISTING CONDITIONS.
11. NO EXTRA COMPENSATION WILL BE CONSIDERED FOR WORK REFERENCED OR IMPLIED IN THE CONTRACT DOCUMENTS, THE CONTRACT DOCUMENTS MAY INCLUDE BUT NOT BE LIMITED TO: ELECTRICAL, MECHANICAL, PLUMBING, ARCHITECTURAL, OR STRUCTURAL. NOR WILL EXTRA COMPENSATION WILL BE CONSIDERED FOR WORK REFERENCED TO OR IMPLIED ON THE CONTRACT DOCUMENT BUT NOT INCLUDED IN THE BID UNLESS ABSOLUTELY NOTED AS SUCH ON THE SUBMITTED BID DOCUMENTS.
12. COORDINATE WITH ARCHITECTURAL WORKING DRAWINGS PRIOR TO ROUGHING- IN
13. FIELD VERIFY ALL DIMENSIONS.

3 / P-01 PLUMBING FIXTURE & EQUIPMENT SCHEDULE

SYM.	DESCRIPTION	CONNECTIONS (IN)				SPECIFICATION	REMARKS	COUNT	WSFU/PER	DFU/PER	TOTAL WSFU	TOTAL DFU
		WASTE	VENT	COLD	HOT							
WC	WATER CLOSET, TANK TYPE, ADA W/ GFF PESSURE ASSIST	3"	2"	½"		PROFLO PF1610PAWHA PF1623PAWH	OR APPROVED EQUAL	2	5	4	10	8
LAV	LAVATORY, WALL HANG WITH METERING FAUCET	2"	2"	½"	½"	PROFLO PF5414WH PROFLO PFXM1337	OR APPROVED EQUAL	2	2	1	4	2
DF	EXTERIOR DRINKING FOUNTAIN	2"	2"	½"		HAWS 1111SFRP	OR APPROVED EQUAL	1	.25	.5	.25	.25
WH	ELEC WATER HEATER 28 GAL 3.5 KW			½"	½"	AO SMITH AENS28D2021T2S45 WITH WALL HANG KIT	OR APPROVED EQUAL					
FD	FLOOR DRAIN	2"	2"			SIOUX CHIEF 862222P6	OR APPROVED EQUAL					
HB	HOSE BIBB			½"		PROFLO PFXSBVHBD	OR APPROVED EQUAL					
								TOTAL			14.25 WSFU	
								TOTAL ESTIMATED DEMAND			11.5 GPM	10.25 DFU

APPROVED EQUALS	A.D.A. COMPLIANCE NOTE
THE CONTRACTOR IS RESPONSIBLE FOR PROVIDING ANY NON-LISTED TRIM AND COMPONENTS	THE PLUMBING CONTRACTOR IS TO VERIFY THAT ALL PLUMBING FIXTURES ARE INSTALLED IN ACCORDANCE WITH THE NC ACCESSIBILITY CODE AS SHOWN ON ARCHITECTURAL PLANS

GAR Engineering
A DIVISION OF FERGUSON FIRE DESIGN, LLC
1000 BLUE RIDGE BLVD. SUITE A CHARLOTTE, NC 28207
PHONE: (704) 751-5400

NORTH CAROLINA PROFESSIONAL SEAL 16396 ENGINEER GREGORY A. RITE
3-31-25

PROJECT:
BLUE RIDGE CONSERVANCY
RESTROOM
BOONE GORGE PARK
BOONE, NC 28607

PLUMBING PLAN

THIS DRAWING AND THE DESIGN SHOWN ARE THE PROPERTY OF GREGORY A. RITE, PE. REPRODUCTION, COPYING, OR USE OF THIS DRAWING WITHOUT THE WRITTEN CONSENT OF GREGORY A. RITE, PE. IS PROHIBITED. ALL CONTRACTORS, SUBCONTRACTORS AND SUPPLIERS OF CONTRACTORS IN THEIR RESPECTIVE TRADES, SHALL FOLLOW ALL OSHA SAFETY RELATED GUIDELINES.

Drawn By: RJ HOLZMEYER
Chkd By: GARITE

DOC. REL.#	DATE	DESCRIPTION

DATE: 3.31.25
SHEET NUMBER: P-01

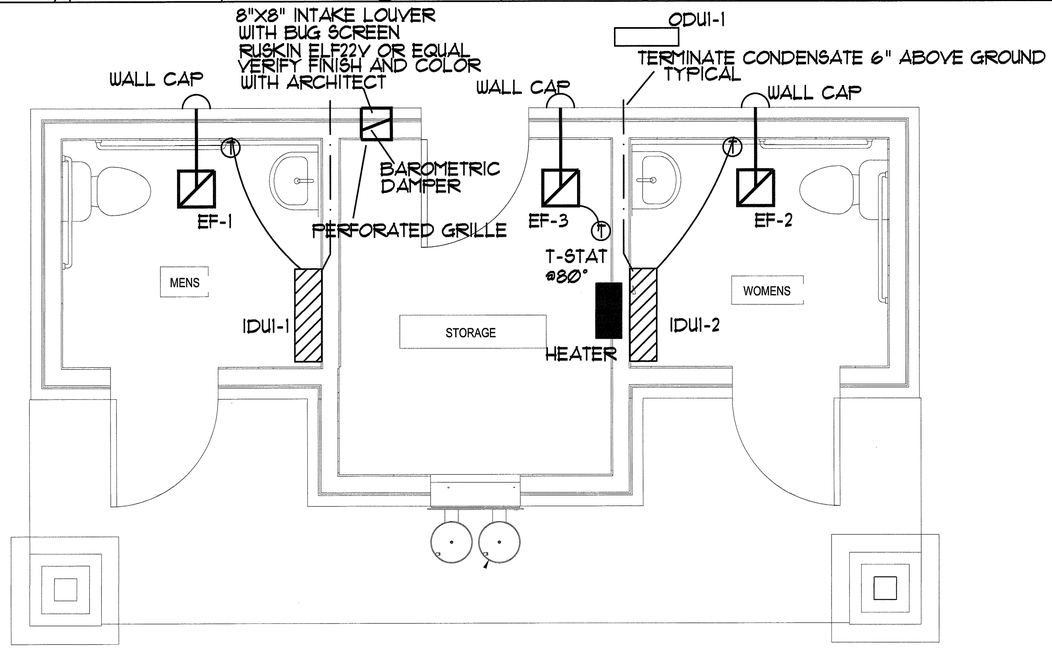

1 / M-01 MECHANICAL PLAN
SCALE 1/2" - 1'0"

2 / M-01 DUCTLESS SYSTEM

BASIS OF DESIGN : MITSUIBISHI

ODU1-1 MXZ-2C20NAHZ2
IDU1-1,2 MSZ-GS06NA
COOLING 22,000 BTUH
HEATING 22,000 BTUH @ 5°
240V 29.5 MCA 40 MOCP

INSTALL PER MANUFACTUER SPECIFICATIONS
WITH REMOTE THERMOSTAT

2 / M-01 EXHAUST FANS & LOUVER

TAG	MAKE	MODEL	LOCATION	OUTPUT	ELECTRICAL	CONTROL
HEATER	BROAN	194	WALL	10240 BTUH	240V 3,000W	INTEGRAL T-STAT

3 / M-01 EXHAUST FANS & LOUVER

TAG	MAKE	MODEL	LOCATION	TYPE	FAN			MOTOR	CONTROL METHOD	NOTES
					AIRFLOW (CFM)	ESP (IN. WG.)	AMPS	VOLTAGE/ PHASE		
EF-12	PANASONIC	FV-05-11VF1	CEILING	VENTILATOR	110	.125	.29	120V	INTERLOCK WITH LIGHTS	VENT THROUGH WALL CAP 4" VENT COORDINATE WITH GENERAL CONTRACTOR
EF-3		FV-05-11VF1	CEILING	VENTILATOR	110	.125	.29	120V	T-STAT	VENT THROUGH WALL CAP 4" VENT COORDINATE WITH GENERAL CONTRACTOR

8 / M-01 MECHANICAL GENERAL NOTES

1. DO NOT SCALE DRAWINGS. SEE ARCHITECTURAL DRAWINGS AND REFLECTED CEILING PLANS FOR EXACT LOCATION OF DOORS, WINDOWS, CEILING DIFFUSERS, ETC.
2. ALL DUCTWORK SHALL BE GALVANIZED SHEET METAL CONSTRUCTED IN ACCORDANCE WITH THE LATEST SMACNA STANDARDS. ALL RECTANGULAR SUPPLY AND RETURN DUCTWORK AND ALL ROUND DUCT SHALL MEET THE REQUIREMENTS OF NC ENERGY CODE
3. CONDENSATE DRAIN PIPING SHALL BE HARD DRAWN COPPER (TYPE "L"). PVC ACCEPTED ALTERNATE
4. ALL PIPING, DUCTS, VENTS, ETC., EXTENDING THROUGH WALLS AND ROOF SHALL BE FLASHED AND COUNTERFLASHED IN A WATERPROOF MANNER. ALL BUILDING ASSEMBLIES SHALL BE PATCHED AND REPAIRED TO MATCH THE EXISTING OR IN COORDINATION WITH DIRECTION OF ARCHITECT.
5. ALL PIPING AND DUCTWORK LOCATIONS SHALL BE COORDINATED WITH THE WORK UNDER OTHER DIVISIONS OF THE SPECIFICATIONS, TO AVOID INTERFERENCE.
6. ANY DEVICE REQUIRING A THERMOSTAT FOR CONTROL SHALL BE FURNISHED WITH A THERMOSTAT WHETHER INDICATED ON THE DRAWINGS OR NOT.
7. LOCATE ALL THERMOSTATS AND SWITCHES 48" AFF. TO MEET N.C. ACCESSIBILITY CODE LATEST EDITION.
8. MECHANICAL CONTRACTOR SHALL BALANCE SYSTEM TO AIR QUANTITIES INDICATED ON PLANS.
9. CONTRACTOR SHALL COORDINATE DESIGN DRAWINGS WITH ARCHITECTURAL DRAWINGS AND NOTIFY ENGINEER OF ANY DISCREPANCIES. THESE DESIGNS ARE BASED ON ARCHITECTURAL PLANS PROVIDED
10. THE CONTRACTOR SHALL GUARANTEE ALL MATERIALS, EQUIPMENT, AND WORKMANSHIP AGAINST ALL DEFECTS OF ANY DESCRIPTION FOR A PERIOD OF 12 MONTHS FROM THE DATE OF FINAL COMPLETION/ACCEPTANCE OF THE WORK. ANY PART OF THIS WORK TO BE FOUND DEFECTIVE DURING THE GUARANTEE PERIOD SHALL BE REPLACED BY THE CONTRACTOR AS SOON AS POSSIBLE AFTER NOTIFICATION AT NO EXTRA COST TO THE OWNER.
11. CLEAR AREA DIMENSIONS. INTERIOR DUCT INSULATION MUST HAVE A R-VALUE OF 5.0. ANY FLEX DUCT WHICH RUNS OVER TEN FEET SHALL HAVE A R-VALUE OF 6.0. ANY FLEX DUCT WHICH RUNS IN ATTIC SPACE SHALL HAVE A R-VALUE OF 8.0.
12. COORDINATE ELECTRICAL REQUIREMENTS OF THE UNITS WITH ELECTRICAL CONTRACTOR.
13. PROVIDE RETURN AIR GRILL WITH FILTER.
14. ALL UNITS TO BE WIRED FOR SINGLE SOURCE POWER. ALL AIR HANDLERS SHALL HAVE AN AUTOMATIC SHUTDOWN SWITCH INSTALLED.
15. REFRIGERANT LINES TO BE SIZED BY MANUFACTURE FOR LENGTH OF RUN BETWEEN COIL AND CONDENSER.
16. MECHANICAL SYSTEM TO BE BALANCED AND TESTED AFTER INSTALLATION TO ASSURE PROPER OPERATION. PROVIDE CERTIFIED TAB REPORT TO ENGINEER AT PROJECT CLOSE OUT.
17. THE CONTRACTOR SHALL PROVIDE ALL LABOR, MATERIAL, AND EQUIPMENT REQUIRED FOR THE COMPLETION AND OPERATION OF ALL SYSTEMS IN THIS SECTION OF WORK IN ACCORDANCE WITH THE APPROVED EDITIONS OF THE 2018 NC MECHANICAL CODE BUILDING CODE, THE LOCAL ADMINISTRATIVE AUTHORITY, SMACNA STANDARDS, AND APPLICABLE NFPA CODES
18. COORDINATE WITH ARCHITECTURAL WORKING DRAWINGS PRIOR TO ROUGHING- IN
19. FIELD VERIFY ALL DIMENSIONS.

GAR Engineering
A DIVISION OF FERGUSON FIRE DESIGN, LLC
PO BOX 1294 BOONE, NC 28607 PHONE: (704) 731-4449

NORTH CAROLINA PROFESSIONAL SEAL 16396 ENGINEER GREGORY A. RITTE
9-31-25

PROJECT:
BLUE RIDGE CONSERVANCY
RESTROOM
BOONE GORGE PARK
BOONE, NC 28607

MECHANICAL PLAN PLAN

Drawn By R.W.C./P.STETER
Chd by G.RITTE

THIS DRAWING AND THE DESIGNS SHOWN ARE THE PROPERTY OF WINDSORT & JONES, PE. THE REPRODUCTION, COPY OR OTHER USE OF THIS DRAWING WITHOUT WRITTEN CONSENT IS PROHIBITED. ANY ALTERATIONS TO BE MADE SUBJECT TO SEAL, ACTION LICENSED PROFESSIONAL ENGINEER. ALL REPRESENTATIVE ENGINEER SHALL FOLLOW ALL CODE & SAFETY RELATED GUIDELINES.

DOC. REL.#	DATE	DESCRIPTION

DATE	SHEET NUMBER
3.31.25	M-01

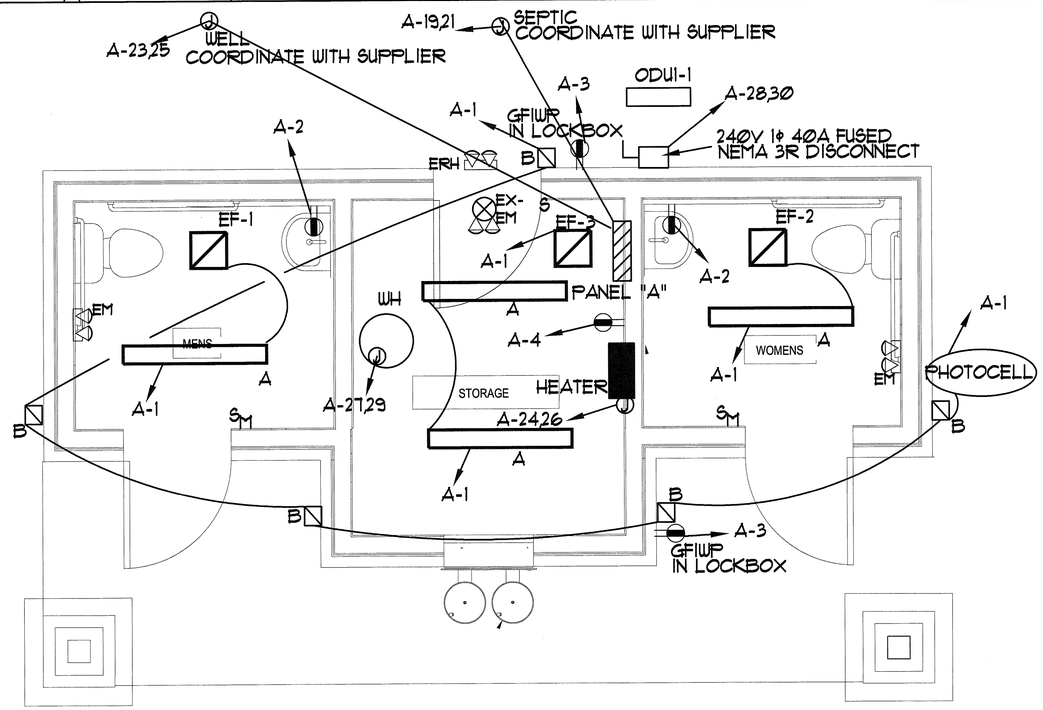

1 E-01 ELECTRICAL PLAN
SCALE 1/2" - 1'0"

2 E-01 LEGEND

SYMBOL	TYPE
S	1-POLE SWITCH
S_M	OCCUPANCY SENSOR WITH DIMMING
	DUPLEX GFI
J	JUNCTION BOX

3 E-01 ELECTRICAL NOTES

1. ALL CONDUCTORS SHALL BE COPPER AND TYPE THHN/THWN #12AWG MINIMUM WIRE SIZES SHALL BE BASED ON 75 DEGREE WIRE AND TERMINATION TEMPERATURE.
2. ALL WIRING DEVICES SHALL BE SPECIFICATION GRADE.
3. ELECTRICAL CONTRACTOR SHALL VERIFY AVAILABLE FAULT CURRENT WITH ELECTRICAL UTILITY PRIOR TO PURCHASING DISTRIBUTION EQUIPMENT
4. ALL EQUIPMENT AND COMPONENTS INSTALLED AS PART OF THIS FACILITY SHALL BE NEW, U.L. LISTED AND LABELED, AND INSTALLED PER THE 2020 NEC, ANY JURISDICTIONAL REQUIREMENTS AND PER THE MANUFACTURERS INSTRUCTIONS.
5. ELECTRICAL CONTRACTOR SHALL COORDINATE WITH ALL OTHER TRADE DISCIPLINE TO AVOID INTERFERENCE AND RE-WORK.
6. ELECTRICAL CONTRACTOR SHALL CHECK FOR AND ELIMINATE SHORTS PRIOR TO ENERGIZING CIRCUITS. FAILURE TO DO SO WILL RESULT IN REPAIRS TO BE MADE AT NO EXPENSE TO OWNERS OR REPRESENTATIVES.
7. PROVIDE ALL MATERIALS AND EQUIPMENT AND PERFORM ALL LABOR REQUIRED TO INSTALL COMPLETE AND OPERABLE ELECTRICAL SYSTEM AS INDICATED ON THE DRAWINGS, SPECIFIED AND AS REQUIRED BY CODE. REFER TO ARCHITECT/ENGINEER FOR ANY QUESTIONS OF INTENT OR DISCREPANCIES OR CONFLICTING INFORMATION.
8. THE CONTRACTOR SHALL NOTIFY THE ENGINEER OF ANY MATERIALS, EQUIPMENT, OR CONFIGURATION BELIEVED TO BE INADEQUATE, UNSUITABLE, IN VIOLATION OF LAWS, ORDINANCES, RULES, OR REGULATIONS OF AUTHORITIES HAVING JURISDICTION PRIOR TO INSTALLATION.
9. THE CONTRACTOR SHALL COORDINATE WORK WITH THE CONTRACTORS OF OTHER TRADES, AND COMPLETE THE ENTIRE INSTALLATION AS SOON AS THE CONDITIONS OF THE BUILDING PERMITS.
10. COORDINATE WITH ARCHITECTURAL WORKING DRAWINGS PRIOR TO ROUGHING- IN.
11. ALL MATERIALS AND EQUIPMENT PROVIDED AND/OR INSTALLED UNDER THIS SECTION OF THE SPECIFICATIONS SHALL BE GUARANTEED FOR A PERIOD OF 1 YEAR FROM THE DATE OF TURNOVER OF THE WORK TO THE OWNER.
12. FIELD VERIFY ALL DIMENSIONS.

4 E-01 FIXTURE SCHEDULE

SYMBOL	TYPE	DESCRIPTION	FIXTURE WATTS	MOUNT
	A	LED 48 LINEAR SURFACE MOUNT 120V 3,000 LUMEN 50K LITHONIA CSS L48 ALO3 (3000) MVOLT SLWB (40) 80CRI OR EQUAL	26W	CLG
	B	LED WALL MOUNT WET LABEL 120V 1289 LUMEN 50K LITHONIA OLWX1 LED 13W 50K OR EQUAL	14W	@ JAM
EM	EM	EMERGENCY DUAL HEAD WITH 90 MINUTE BATTERY BACKUP	2-8W	WALL
ERH	ERH	EMERGENCY OUTDOOR REMOTE DUAL HEAD WITH 90 MINUTE BATTERY BACKUP, WET LABEL	2-8W	ABOVE DOOR
EX-EM	EX-EM	EMERGENCY / EXIT LIGHT COMBO WITH RED LETTER STENCIL FACE AND 90 MINUTE BATTERY BACKUP	2-8W 1-2.3W	WALL

ALL FIXTURES TO BE APPROVED BY GENERAL CONTRACTOR AND OWNER PRIOR TO PURCHASE AND INSTALL.

PANEL DESIGNATION: PANEL "A"
VOLTAGE: 240/120, 1Φ, 3 WIRE
AMPERES: 200A
LOCATION: INTERIOR
MAIN: MCB
PANEL MOUNTING: SURFACE
NEMA 1

LOAD SERVED	CONN LOAD KVA A	CONN LOAD KVA B	CIRCUIT BREAKER AMPS	CIRCUIT BREAKER POLES	CKT NO.	CKT NO.	CIRCUIT BREAKER AMPS	CIRCUIT BREAKER POLES	CONN LOAD KVA A	CONN LOAD KVA B	LOAD SERVED
LIGHTING/ FANS	.3		20	1	1	2	20	1	.4		RESTROOM RECEPTACLE
SERVICE OUTLETS		.4	20	1	3	4	20	1		.2	SERVICE RECEPTACLE
SPARE			20	1	5	6	20	1			SPARE
SPARE			20	1	7	8	20	1			SPARE
SPARE			20	1	9	10	20	1			SPARE
BLANK				1	11	12		1			BLANK
BLANK				1	13	14		1			BLANK
BLANK				1	15	16		1			BLANK
BLANK				1	17	18		1			BLANK
SEPTIC	1.5	1.5	20	2	19 21	20		1			BLANK
						22		1			BLANK
WELL	1.5	1.5	20	2	23 25	24 26	20	2	1.5	1.5	HEATER
WATER HEATER	1.8	1.8	20	2	27 29	28 30	40	2	1.0	1.0	ODUI-1
SUB-TOTAL	5.1	5.2							2.9	2.7	SUB-TOTAL

TOTAL 15.9 KVA
@ 240 66.25 A

SEPTIC AND WELL ARE PLACE HOLDER LOADS
ELECTRICAL CONTRACTOR TO COORDINATE
WITH SUPPLIERS

5 E-01 PANEL SCHEDULE

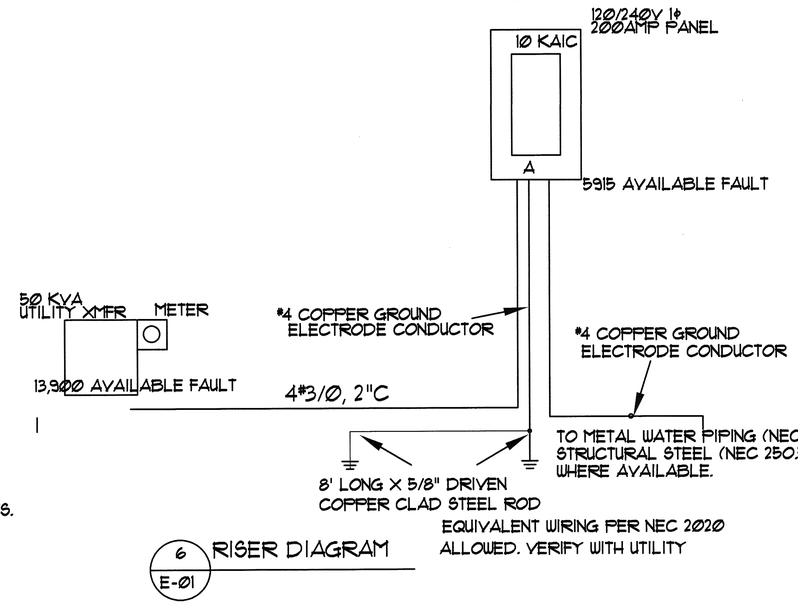

6 E-01 RISER DIAGRAM

7 E-01 COPPER WIRING CHART
WIRING EQUIVALENTS PER NEC ALLOWED

20	1P - 2#12, #12GND, ½"C 2P - 3#12, #12GND, ½"C 3P - 3#12, #12GND, ½"C
25	1P - 2#10, #12GND, ½"C 2P - 3#10, #12GND, ½"C 3P - 4#10, #12 GND, ½"C
30	1P - 2#10, #10GND, ½"C 2P - 3#10, #10GND, ½"C 3P - 4#10, #10 GND, ½"C
35/40/50	1P - 2#8, #10GND,¾"C 2P - 3#8, #10GND,¾"C 3P - 4#8, #10 GND, ¾"C
60	1P - 2#6, #10 GND, ¾"C 2P - 3#6, #10 GND, ¾"C 3P - 4#6, #10 GND, 1"C
70/80	1P - 2#4, #8 GND, 1"C 2P - 3#4, #8 GND, 1"C 3P - 4#4, #8 GND, 1¼"C
100	1P - 2#3, #8 GND, 1"C 2P - 3#3, #8 GND, 1"C 3P - 4#3, #8 GND, 1¼"C
150	1P - 2# 1/0, #6 GND, 1¼"C 2P - 3# 1/0, #6 GND, 1½"C 3P - 4# 1/0, #6 GND, 1½"C
200	1P - 2#3/0, #6 GND, 2"C 2P - 3#3/0, #6 GND, 2"C 3P - 4#3/0, #6 GND, 2"C
225	1P - 2#4/0, #4 GND, 2"C 2P - 3#4/0, #4 GND, 2"C 3P - 4#4/0, #4 GND, 2"C
400	1P - 2#500, #3 GND, 3½"C 2P - 3#500, #3 GND, 3½"C 3P - 4#500, #3 GND, 3½"C

GAR Engineering
A DIVISION OF FERGUSON FIRE DESIGN, LLC
PROFESSIONAL ENGINEERING SERVICES - CONSULTING
PROFILE FIRE 73.1.5.4.4.6 - CORPORATE FILE 2.0.0.0.7

3-31-25
NORTH CAROLINA PROFESSIONAL SEAL 16396 ENGINEER GREGORY A. RITCE

BLUE RIDGE CONSERVANCY
RESTROOM
BOONE GORGE PARK
BOONE, NC 28607

ELECTRICAL PLAN

THIS DRAWING AND THE DESIGN SHOWN ARE THE PROPERTY OF GREGORY A. RITCE, P.E. REPRODUCTION, COPYING, OR USE OF THIS DRAWING WITHOUT THE WRITTEN CONSENT IS PROHIBITED. THIS DRAWING IS TO BE USED BY THE OWNER AND CONTRACTORS IN THEIR RESPECTIVE TRADES, WHILE ADHERING TO ALL OSHA SAFETY RELATED GUIDELINES.

Drawn By: RWOLDMEYER
Chk'd by: GARITE

DOC. REL#	DATE	DESCRIPTION

DATE: 3.31.25
SHEET NUMBER: E-01

1. GENERAL

1.01. THE STRUCTURE IS DESIGNED IN ACCORDANCE AND MEETS THE DESIGN CRITERIA OF THE FOLLOWING CODES:
2018 NORTH CAROLINA BUILDING CODE
ASCE 7-10, MINIMUN DESIGN LOADS FOR BUILDING AND OTHER STRUCTURES
NDS-15, NATIONAL DESIGN SPECIFICATIONS FOR WOOD CONSTRUCTION

1.02. METHODS, PROCEDURES, AND SEQUENCES OF CONSTRUCTION ARE THE RESPONSIBILITY OF THE CONTRACTOR. THE CONTRACTOR SHALL TAKE ALL NECESSARY PRECAUTIONS TO MAINTAIN AND INSURE THE INTEGRITY OF THE STRUCTURE AT ALL STAGES OF CONSTRUCTION.

1.03. SCALES NOTED ON THE DRAWINGS ARE FOR GENERAL REFERENCE ONLY. NO DIMENSIONAL INFORMATION SHALL BE OBTAINED BY DIRECT SCALING OF THE DRAWINGS.

1.04. THE GENERAL CONTRACTOR IS RESPONSIBLE FOR COORDINATION OF ALL RESULTING REVISIONS TO THE STRUCTURAL SYSTEM OR OTHER TRADES AS A RESULT OF ACCEPTANCE OF CONTRACTOR PROPOSED ALTERNATIVES OR SUBSTITUTIONS.

1.05. ELEVATIONS SHOWN ON PLAN ARE BASED ON FINISHED FLOOR ELEVATION +/-0'-0".

2. MATERIAL STRENGTHS

2.01. CONCRETE (f'c @ 28 DAYS)
ALL CONCRETE U.N. . . . . 4,000 PSI (w/cm=0.45)

2.02. REINFORCING STEEL (Fy)
REBAR (ASTM A615) . . . . . 60,000 PSI

2.02. STRUCTURAL STEEL (Fy)
ANGLES, PLATES, MISC, (ASTM A36) . . . . . .36,000 PSI

2.04. WOOD FRAMING (2015 NDS)
COLUMNS
SP - No. 2, 5"x5" AND LARGER

BEAMS / STUDS / TRUSS MEMBERS
SPF - No. 2, 5"x5" AND LARGER

2.05. SOIL/SUBGRADE PROPRETIES (ASSUMED)
ALLOWABLE SOIL BEARING PRESSURE . . . . . ASSUMED 2000 PSF

3. FOUNDATION AND SLAB ON GRADE

3.01. THE SUBSURFACE INFORMATION AND FOUNDATION DESIGN ARE BASED ON THE FOUNDATION SECTION OF THE BUILDING CODE AND SHALL BE VERIFIED BY THE CONTRACTOR PRIOR TO THE START OF CONSTRUCTION. THE FOUNDATION IS ASSUMED TO BE BEARING ON A SUBGRADE WITH A MINIMUM BEARING CAPACITY OF 2000PSF.

3.02. SLAB-ON-GRADE AND THICKENED SLAB SHALL BEAR ON ORIGINAL, UNDISTURBED SOIL OR WELL COMPACTED FILL (95% OF STANDARD PROCTOR).

3.03. CONTRACTOR TO KEEP EXCAVATIONS DRY AND PROTECTED FROM FROST AT ALL TIMES DURING THE FOUNDATION CONSTRUCTION.

3.04. FOUNDATION CONDITIONS ENCOUNTERED DURING CONSTRUCTION, WHICH DIFFER FROM THOSE DESCRIBED "ASSUMED VALUES" AND CONDITIONS SHALL BE REPORTED TO THE ENGINEER (DRYE- MCGMALERY ENGINEERING, PLLC), BEFORE FURTHER CONSTRUCTION IS ATTEMPTED.

3.05 SLABS-ON-GRADE SHALL BE CONSTRUCTED IN ACCORDANCE WITH THE PLANS AND NOTES AND SHALL HAVE CONTRACTION JOINTS INSTALLED PER PLAN. CONTRACTION JOINTS SHALL BE TYPICALLY PROVIDED SUCH THAT NO AREA BOUNDED BY CONSTRUCTION AND/OR CRACK CONTROL JOINTS CONTAINS MORE THAN 450 SQUARE FEET OF SLAB AREA, THE SPACING OF THE JOINTS DOES NOT EXCEED 36 TIMES THE SLAB THICKNESS, AND THE RESULTING ASPECT RATIO OF THE DIMENSIONS OF SLAB AREA DOES NOT EXCEED 1.5 TO 1. CRACK CONTROL JOINTS SHALL BE MADE USING A "SOFT-CUT" CONCRETE SAW AS SOON AS THE SLAB WILL SUPPORT THE WEIGHT OF THE SAW AND OPERATOR WITHOUT DISTURBING THE FINAL FINISH. THE CRACK CONTROL JOINTS SHALL BE A MAXIMUM WIDTH OF 1/8" WIDE AND A MINIMUM DEPTH OF 1/3 THE SLAB THICKNESS. REFER TO DRAWINGS FOR PRESCRIBED LOCATIONS OF CONTRACTION / CRACK CONTROL JOINTS.

4. WOOD CONSTRUCTION CONNECTORS

4.01. ALL WOOD CONSTRUCTION CONNECTORS SHOWN SHALL BE SIMPSON STRONG-TIE CONNECTORS MANUFACTURED BY SIMPSON STRONG-TIE COMPANY, INC. (OR APPROVED EQUIVALENT). BEFORE SUBSTITUTING ANOTHER BRAND, CONFORM LOAD CAPACITY BASED ON RELIABLE PUBLISHED TESTING DATA OR CALCULATIONS AND SUBMIT TO DRYE-MCGLAMERY ENGINEERING, PLLC FOR EVALUATION AND WRITTEN APPROVAL FOR SUBSTITUTION PRIOR TO INSTALLATION.

4.02 ALL SPECIFIED FASTENERS SHALL BE INSTALLED ACCORDING TO THE DETAILS AND THE MANUFACTURER'S INSTRUCTIONS. ALL HOLES IN CONNECTORS SHALL BE PROPERLY NAILED TO THE WOOD STRUCTURE. CONTACT DRYE-MCGLAMERY ENGINEERING, PLLC FOR FASTENERS NOT SHOWN. INCORRECT FASTENER QUANTITY, SIZE, TYPE, MATERIAL, OR FINISH MAY CAUSE THE CONNECTION TO FAIL. 16D FASTENERS ARE COMMON NAILS (8 GA. X 3 1/2") AND CANNOT BE REPLACED WITH 16D SINKERS (9GA. X 3 1/4") UNLESS OTHERWISE SPECIFIED.

4.03 DIAMETER (PER THE NDS, SECTION 8.1.2.1).

4.04 INSTALL ALL SPECIFIED FASTENERS BEFORE LOADING THE CONNECTION.

4.05 PNEUMATIC OR POWDER-ACTUATED FASTENERS MAY DEFLECT AND INJURE THE OPERATOR OR OTHERS. NAIL GUNS MAY BE USED TO INSTALL CONNECTORS, PROVIDED THE CORRECT QUANTITY AND TYPE OF NAILS ARE PROPERLY INSTALLED IN THE NAIL HOLES. GUNS WITH NAIL HOLE-LOCATING MECHANISMS SHOULD BE USED. FOLLOW THE MANUFACTURER'S INSTRUCTIONS AND USE THE APPROPRIATE SAFETY EQUIPMENT.

4.06 MEMBERS JOISTS SHALL BEAR COMPLETELY ON THE CONNECTOR SEAT, AND THE GAP BETWEEN THE JOIST END AND THE HEADER SHALL NOT EXCEED 1/8" PER ASTM TEST STANDARDS.

4.07 UNLESS OTHERWISE NOTED, BOLTS AND NAILS SHALL NOT BE COMBINED. 8D, 10D, AND 16D SPECIFY COMMON NAILS.

4.08 UNLESS OTHERWISE NOTED, BENDING STEEL IN THE FIELD MAY CAUSE FRACTURES AT THE BEND LINE. FRACTURED STEEL WILL NOT CARRY LOAD AND MUST BE REPLACED.

4.09 A FASTENER THAT SPLITS THE WOOD WILL NOT SUPPORT THE DESIGN LOAD. IF THE WOOD HAS A TENDENCY TO SPLIT, PRE-BORE HOLES TO ¾ OF THE NAIL DIAMETER (1997 NATIONAL DESIGN SPECIFICATION, 2.1.3.1).

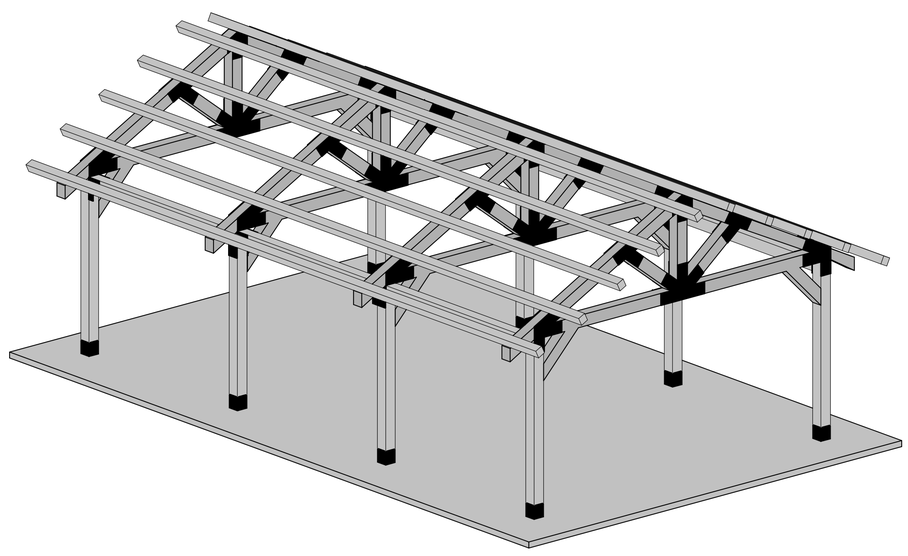

DRYE-MCGLAMERY ENGINEERING STRUCTURAL ABBREVIATIONS

@	AT	MECH	MECHANICAL
AB	ANCHOR BOLT	MFR	MANUFACTURER
ACI	AMERICAN CONCRETE INSTITUTE	MIN	MINIMUM
ADDL	ADDITIONAL	MISC	MISCELLANEOUS
ALT	ALTERNATE	MK	MARK
ANSI	AMERICAN NATIONAL STANDARDS INSTITUTE	MO	MASONRY OPENING
ARCH	ARCHITECTURAL	MPH	MILES PER HOUR
ASTM	AMERICAN SOCIETY OF TESTING MATERIALS	NS	NON SHRINK OR NEAR SIDE
B/	BOTTOM OF	NTS	NOT TO SCALE
BLDG	BUILDING	C/C	CENTER TO CENTER
BRG	BEARING	OF	OUTSIDE FACE
BTWN	BETWEEN	OH	OVERHANG
BYND	BEYOND	PL	PLATE
CIP	CAST IN PLACE	PLF	POUNDS PER LINEAR FOOT
CJ	CONTRACTION OR CONSTRUCTION JOINT	PLYWD	PLYWOOD
CL	CENTERLINE	PSF	POUNDS PER SQUARE FOOT
CLR	CLEAR	PSI	POUNDS PER SQUARE INCH
COMP	COMPOSITE	QTY	QUANTITY
CONC	CONCRETE	R	RADIUS
CONN	CONNECTION	REF	REFERENCE
CONT	CONTINUOUS	REINF	REINFORCED OR REINFORCING
CTR	CENTER	REQD	REQUIRED
Ø	DIAMETER	REV	REVISION
DIM	DIMENSION	RO	ROUGH OPENING
DL	DEAD LOAD	SCHED	SCHEDULE
DN	DOWN	SIM	SIMILAR
DWG	DRAWING	SOG	SLAB ON GRADE
EA	EACH	T/	TOP OF
EW	EACH WAY	T&B	TOP AND BOTTOM
EXIST	EXISTING	T&G	TONGUE AND GROOVE
EXP	EXPANSION	TOC	TOP OF CONCRETE
FD	FLOOR DRAIN	TOF	TOP OF FOOTING
FDTN	FOUNDATION	TOJ	TOP OF JOIST
FTG	FOOTING	TOS	TOP OF STEEL
GALV	GALVANIZED	TOW	TOP OF WALL
ID	INSIDE DIAMETER	TYP	TYPICAL
IF	INSIDE FACE	UNO	UNLESS NOTED OTHERWISE
INT	INTERIOR	VAR	VARIES
K	KIP=1000 LB	VEF	VERTICAL EACH FACE
L	ANGLE	VERT	VERTICAL
LB	POUND	VIF	VERIFY IN FIELD
LG	LONG	W/	WITH
LL	LIVE LOAD	W/O	WITHOUT
		WWF	WELDED WIRE FABRIC

DESIGN DATA

1. ALL CONSTRUCTION SHALL COMPLY AS APPROPRIATE WITH THE FOLLOWING CODES AND/OR SPECIFICATIONS:
2018 NORTH CAROLINA BUILDING CODE
ASCE 7-10, *MINIMUM DESIGN LOADS FOR BUILDINGS AND OTHER STRUCTURES*
AISC 360-16, *SPECIFICATION FOR STRUCTURAL STEEL BUILDINGS*

2. DESIGN LOADS:

A. ROOF LOADS:

DEAD LOAD	SELF-WEIGHT
LIVE LOAD	20 PSF

B. WIND LOAD:

BASIC WIND SPEED (3-SEC GUST)	130 MPH (Vult)
EXPOSURE	C
IMPORTANCE FACTOR, I	1.00
DIRECTIONALITY FACTOR, kd	0.85
INTERNAL PRESSURE COEFFICIENT	0

C. SNOW LOAD:

GROUND SNOW LOAD	20 PSF

D. SEISMIC LOAD:

SOIL SITE CLASS	D (ASSUMED)
IMPORTANCE FACTOR, I	1.00
0.2 SECOND Ss	0.262g
1.0 SECOND S1	0.097g
0.2 SECOND Sds	0.234g
1.0 SECOND Sd1	0.227g
SEISMIC DESIGN CATEGORY	C

E. FOUNDATION:

ALLOWABLE BEARING CAPACITY	2000 PSF (ASSUMED)

DRYE McGLAMERY ENGINEERING, PLLC
NC FIRM LICENSE #P-1305

NORTH CAROLINA PROFESSIONAL SEAL 040795 ENGINEER HEATH WESTON DRYE 2025-04-02

No.	Description	Date
1	ISSUED FOR REVIEW	2025-03-05
0	ISSUED FOR CONSTRUCTION	2025-04-02

BLUE RIDGE CONSERVANCY
PAVILION
BOONE GORGE PARK
BOONE, NC 28607

DRYE-MCGLAMERY
ENGINEERING, PLLC
325 McGILL AVENUE NW SUITE 115
CONCORD, NC 28027

ISSUED FOR CONSTRUCTION

DME PROJECT #: 2025045
DRAWN BY CJH
CHECKED BY HWD

GENERAL NOTES

S-0

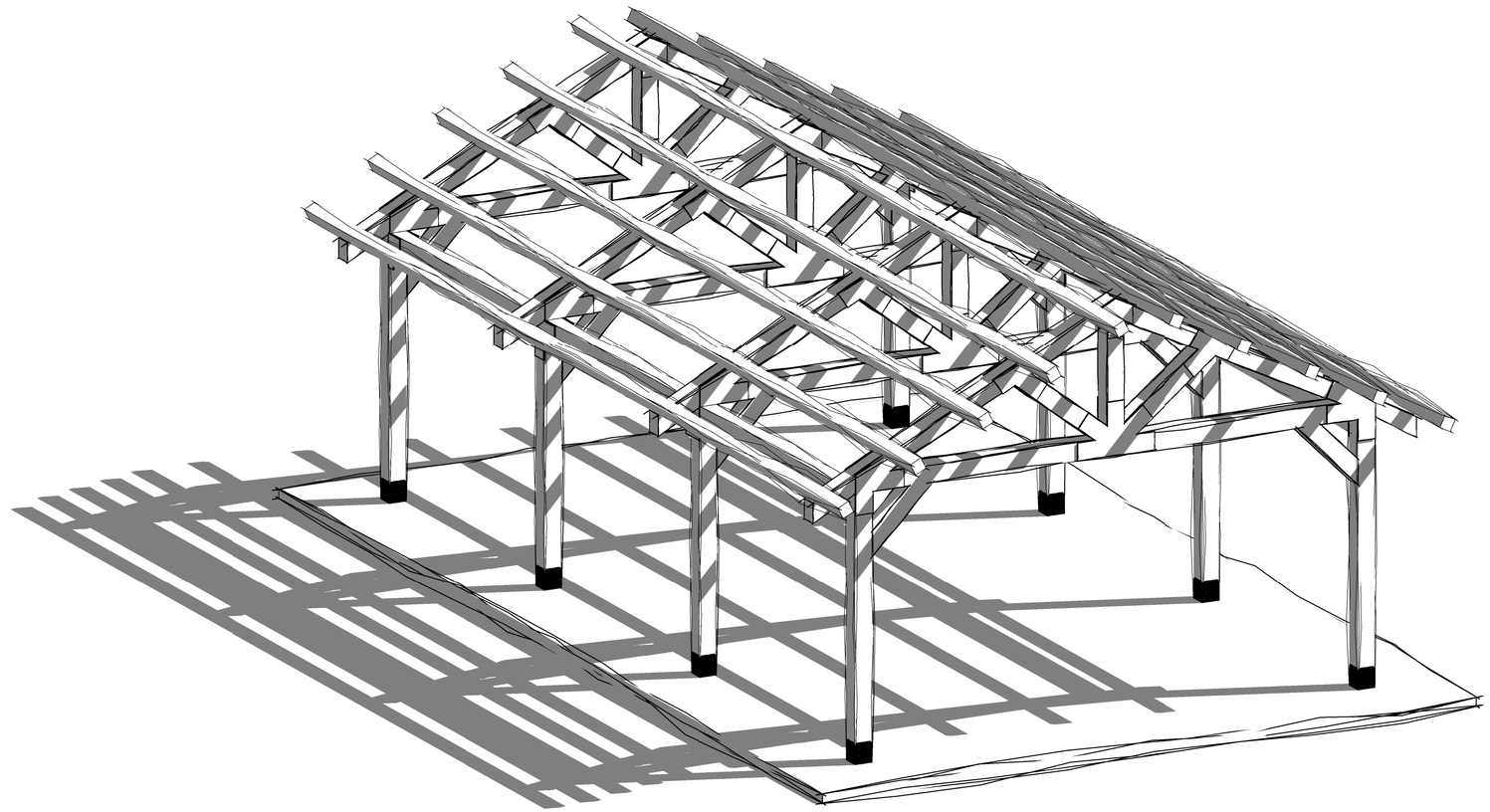

1 Project Overview

DRYE McGLAMERY ENGINEERING, PLLC

NC FIRM LICENSE #P-1305

NORTH CAROLINA PROFESSIONAL SEAL 040795 ENGINEER HEATH WESTON DRYE

2025-04-02

No.	Description	Date
1	ISSUED FOR REVIEW	2025-03-05
O	ISSUED FOR CONSTRUCTION	2025-04-02

BLUE RIDGE CONSERVANCY
PAVILLION
BOONE GORGE PARK
BOONE, NC 28607

DRYE-MCGLAMERY
ENGINEERING, PLLC
325 McGILL AVENUE NW SUITE 115
CONCORD, NC 28027

ISSUED FOR CONSTRUCTION

DME PROJECT #: 2025045

DRAWN BY CJH

CHECKED BY HWD

BUILDING ISOMETRICS

S-1

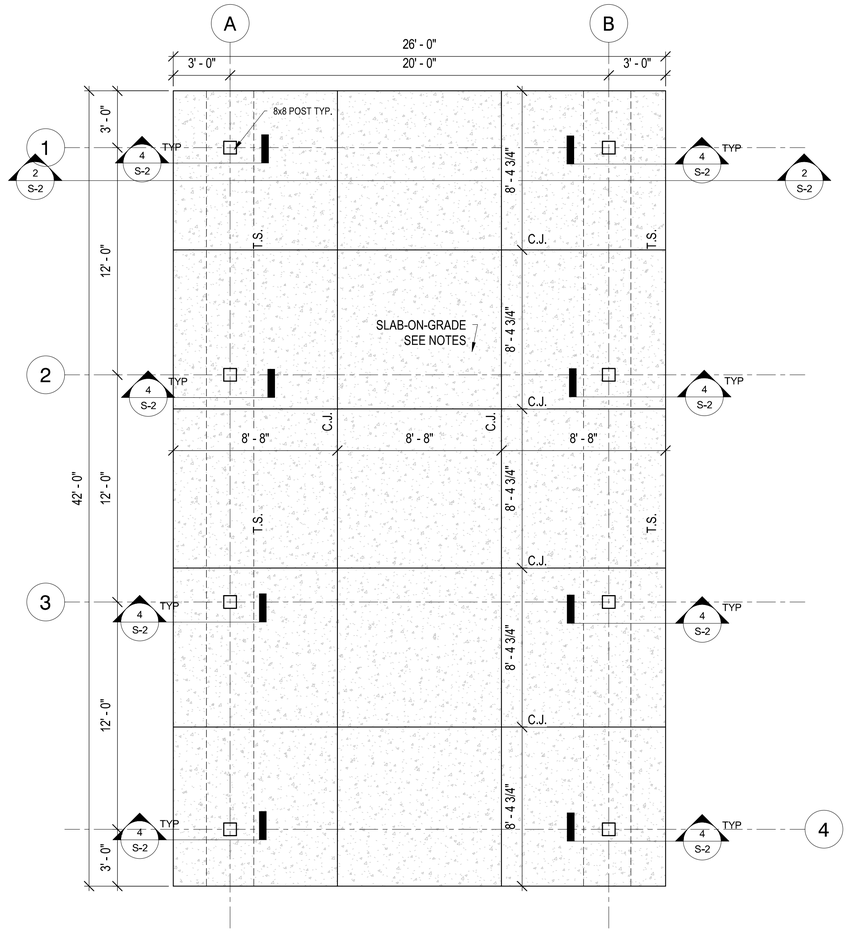

1 TIMBER BUILDING FOUNDATION PLAN
1/4" = 1'-0"

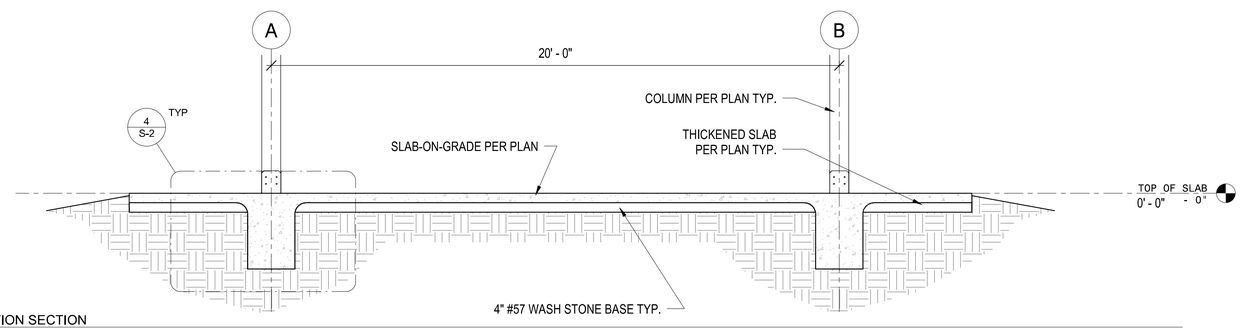

2 FOUNDATION SECTION
3/8" = 1'-0"

FOUNDATION NOTES:

1. CONCRETE SLAB-ON-GRADE TO BE 4" THICK REINFORCED WITH #4 BARS AT 24" C/C EACH WAY CENTERED IN SLAB CROSS SECTION.
2. PROVIDE 4" #57 WASH STONE BASE BENEATH SLAB-ON-GRADE.
3. COLUMN GRID DIMENSIONS ARE TO CENTERLINE OF POSTS / FRAMING OR TYP. SLAB DIMENSIONS ARE TO EDGE OF SLAB TYP.
4. REFERENCE ELEVATION +/-0'-0" SHALL BE TO TOP OF SLAB-ON-GRADE.
5. POSTS SHALL BE 8x8 SP NO. 2 TYP. PROVIDE SIMPSON MPB88Z MOMENT POST BASE TYP. FOR FASTENING POST BASES TO THICKENED SLAB.
6. SLAB-ON-GRADE / THICKENED SLAB SHALL BEAR ON UNDISTURBED SOIL OR WELL COMPACTED FILL (95% OF STANDARD PROCTOR).
7. ALL WOOD SHALL BE PRESSURE TREATED TYP.

CJ DENOTES CONTRACTION JOINT. REFER TO DETAILS FOR REQUIREMENTS.

T.S. DENOTES THICKENED SLAB EDGE. REFER TO DETAILS FOR REQUIREMENTS.

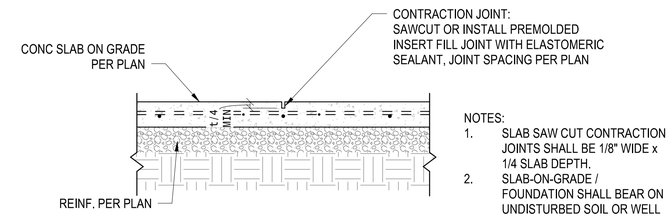

NOTES:
1. SLAB SAW CUT CONTRACTION JOINTS SHALL BE 1/8" WIDE x 1/4 SLAB DEPTH.
2. SLAB-ON-GRADE / FOUNDATION SHALL BEAR ON UNDISTURBED SOIL OR WELL COMPACTED FILL (95% OF STANDARD PROCTOR).

3 TYPICAL SLAB ON GRADE AND CONTRACTION JOINT DETAIL
1" = 1'-0"

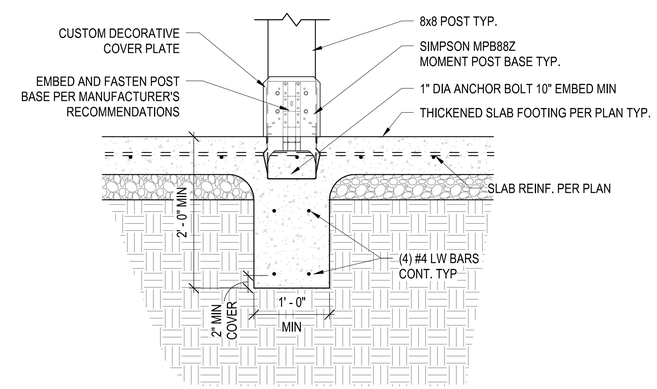

4 TYPICAL INTERIOR POST BASE DETAIL
1" = 1'-0"

DRYE McGLAMERY
ENGINEERING, PLLC
NC FIRM LICENSE #P-1305

NORTH CAROLINA PROFESSIONAL SEAL 040795 ENGINEER HEATH WESTON DRYE
2025-04-02

No.	Description	Date
1	ISSUED FOR REVIEW	2025-03-05
0	ISSUED FOR CONSTRUCTION	2025-04-02

BLUE RIDGE CONSERVANCY
PAVILLION
BOONE GORGE PARK
BOONE, NC 28607

DRYE-MCGLAMERY
ENGINEERING, PLLC
325 McGILL AVENUE NW SUITE 115
CONCORD, NC 28027

ISSUED FOR CONSTRUCTION

DME PROJECT #: 2025045
DRAWN BY CJH
CHECKED BY HWD

FOUNDATION PLAN

S-2

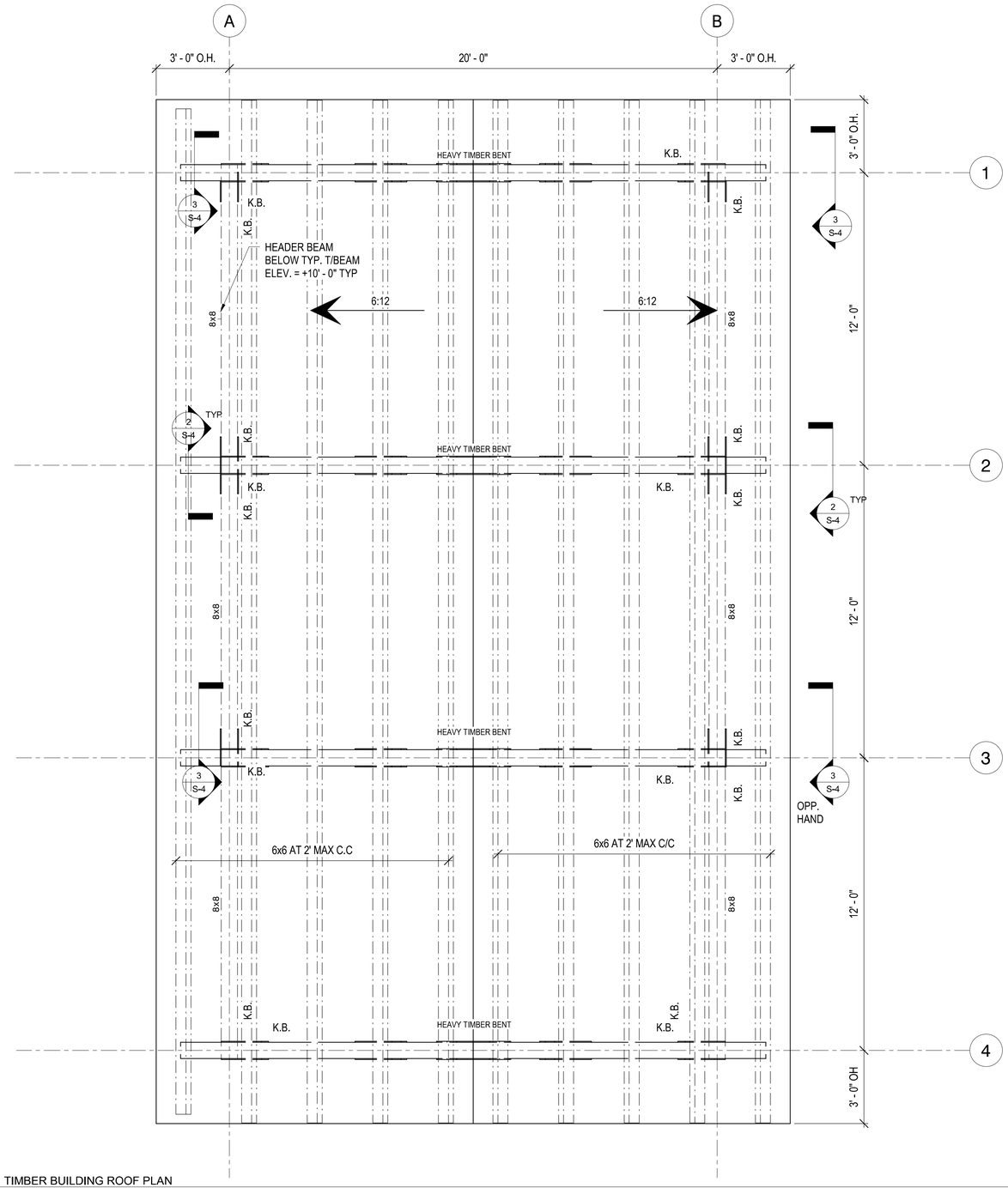

1 TIMBER BUILDING ROOF PLAN
3/8" = 1'-0"

ROOF FRAMING NOTES:

1. TIMBER FRAMED TRUSSES / BENTS SHALL BE CONSTRUCTED PER DETAILS PROVIDED HEREIN. TRUSSES / BENTS SHALL BE CONSTRUCTED ON THE GROUND COMPLETELY AND THEN LIFTED INTO PLACE. IF CONTRACTOR ELECTS TO CONSTRUCT TRUSS IN PLACE, TEMPORARY SHORING OF TRUSS BOTTOM CHORD SHALL BE PROVIDED UNTIL TRUSS IS FULLY CONSTRUCTED AS DETAILED HEREIN.
2. (2) 1/4" A36 PLATES MUST BE USED (ONE PLATE ON EACH SIDE OF TRUSS). REFER TO TRUSS CONNECTION DETAILS.
3. SEE DETAILS FOR EACH TRUSS CONNECTIONS TYP.
4. PURLINS SHALL BE FRAMED WITH 6x6 NO. 2 SP TIMBER MEMBERS TYP.
5. PURLINS SHALL BE FASTENED TO TRUSS TOP CHORDS WITH SIMPSON A44 ANGLE OR EQUIVALENT AND (4) 10D RING SHANK NAILS TYP. OR EQUIVALENT.
6. TRUSSES / BENTS SHALL BEAR ON TOP OF 8x8 POSTS TYP. TOP OF POST ELEVATION SHALL BE +10'-0" ABOVE FINISHED FLOOR / FINISHED GRADE TYP.
7. PROVIDE 29 GAUGE STANDING SEAM METAL ROOFING FASTENED DIRECTLY TO PURLINS. COLOR PER OWNER.

6:12 → INDICATES ROOF SLOPE TYP.

NC FIRM LICENSE #P-1305

NORTH CAROLINA PROFESSIONAL SEAL 040795 ENGINEER HEATH WESTON DRYE 2025-04-02

No.	Description	Date
1	ISSUED FOR REVIEW	2025-03-05
O	ISSUED FOR CONSTRUCTION	2025-04-02

BLUE RIDGE CONSERVANCY
PAVILLION
BOONE GORGE PARK
BOONE, NC 28607

DRYE-MCGLAMERY
ENGINEERING, PLLC
325 McGILL AVENUE NW SUITE 115
CONCORD, NC 28027

ISSUED FOR CONSTRUCTION

DME PROJECT #: 2025045

DRAWN BY CJH

CHECKED BY HWD

ROOF FRAMING PLAN

S-3

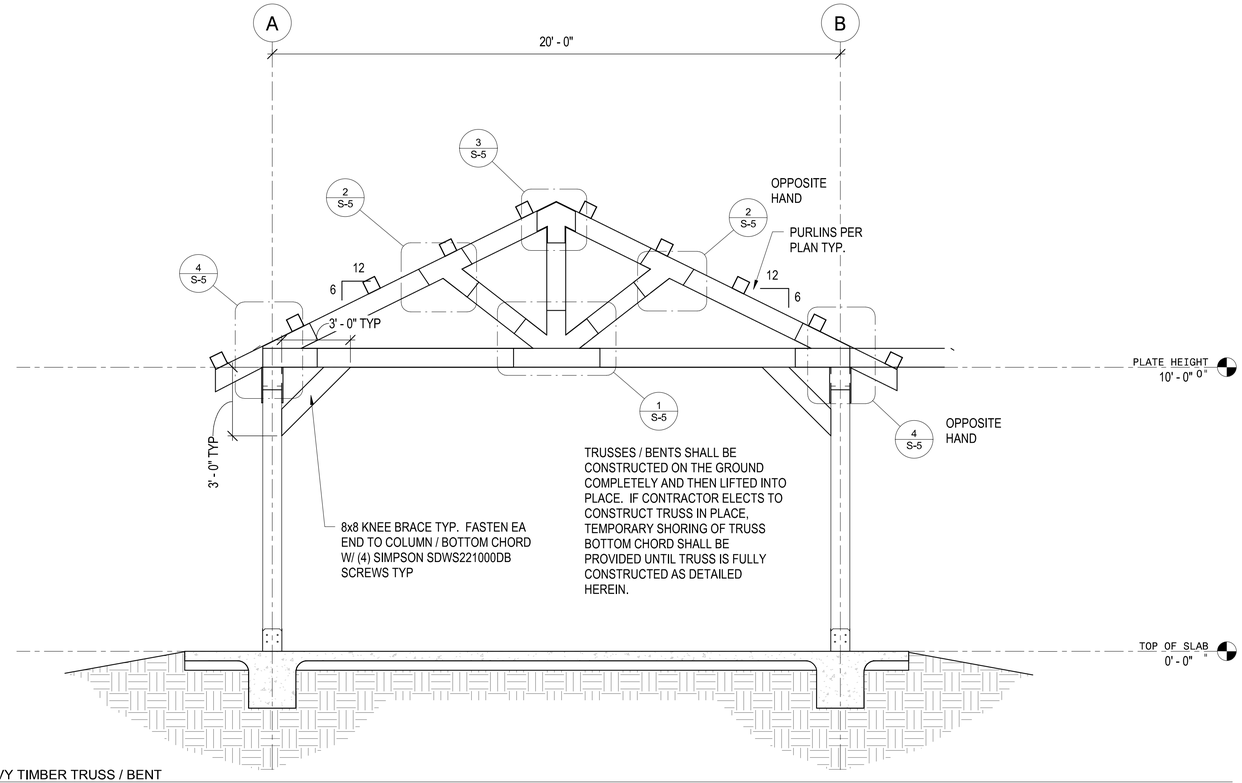

1 TYPICAL HEAVY TIMBER TRUSS / BENT
3/8" = 1'-0"

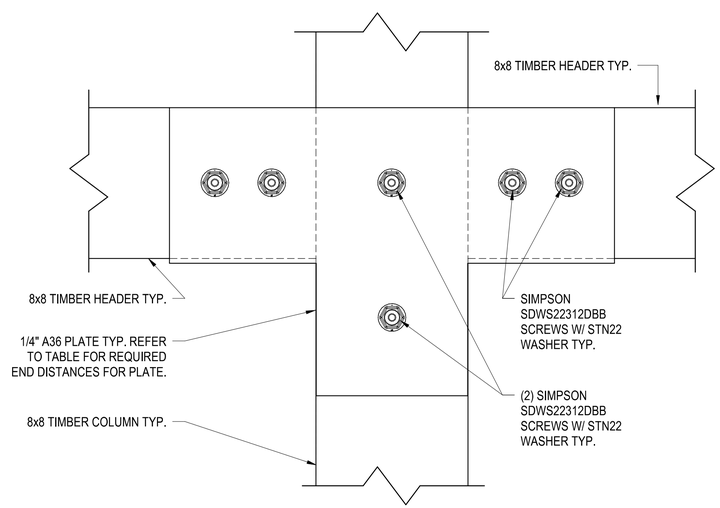

2 INTERIOR TIMBER HEADER CONNECTION DETAIL
3" = 1'-0"

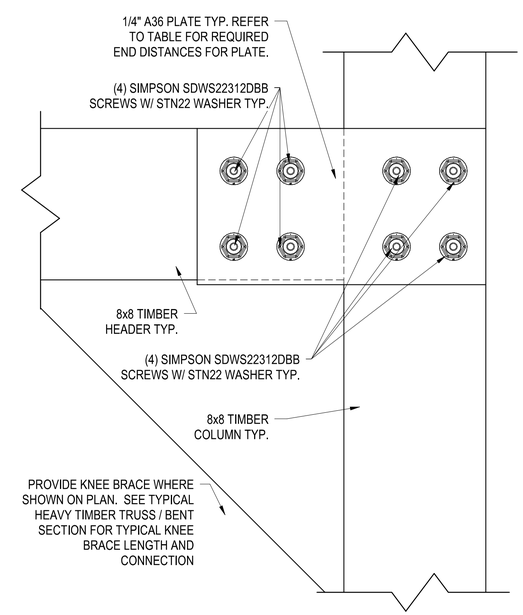

3 TIMBER HEADER CONNECTION DETAIL
3" = 1'-0"

DRYE McGLAMERY ENGINEERING, PLLC
NC FIRM LICENSE #P-1305

NORTH CAROLINA PROFESSIONAL SEAL 040795 ENGINEER HEATH WESTON DRYE
2025-04-02

No.	Description	Date
1	ISSUED FOR REVIEW	2025-03-05
O	ISSUED FOR CONSTRUCTION	2025-04-02

BLUE RIDGE CONSERVANCY
PAVILLION
BOONE GORGE PARK
BOONE, NC 28607

DRYE-MCGLAMERY
ENGINEERING, PLLC
325 McGILL AVENUE NW SUITE 115
CONCORD, NC 28027

ISSUED FOR CONSTRUCTION

DME PROJECT #: 2025045
DRAWN BY CJH
CHECKED BY HWD

BUILDING SECTIONS

S-4

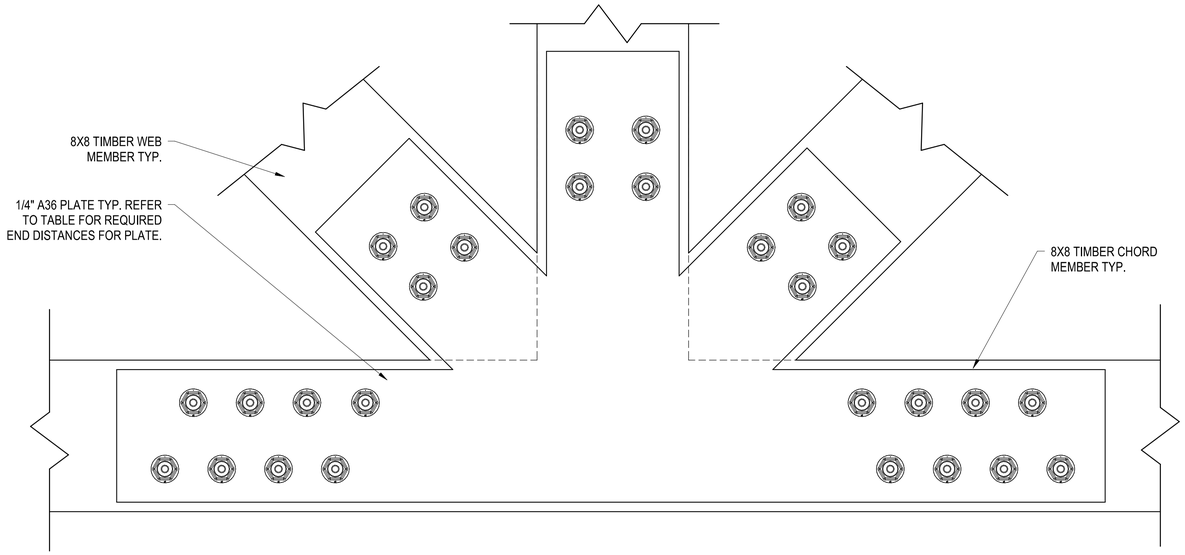

1 TIMBER TRUSS CONNECTION 1
3" = 1'-0"

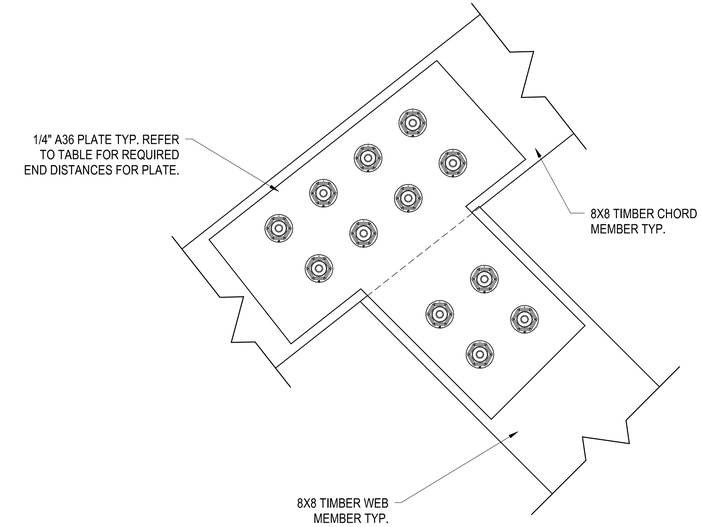

2 TIMBER TRUSS CONNECTION 2
3" = 1'-0"

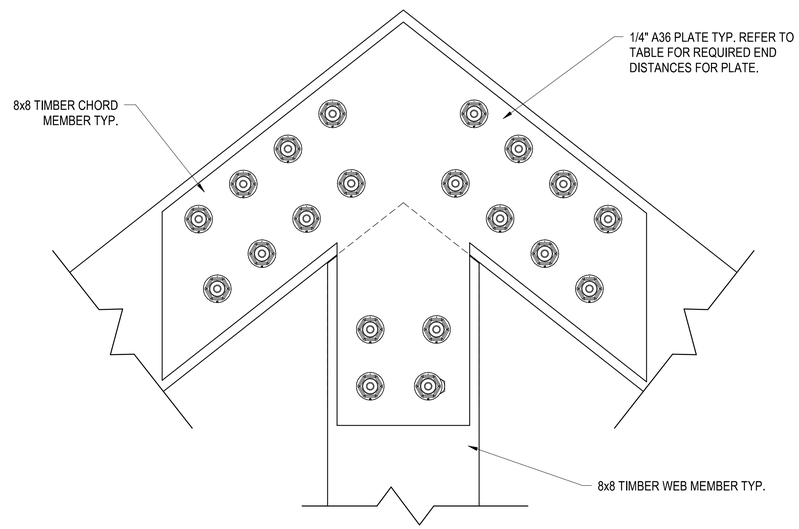

3 TIMBER TRUSS CONNECTION 3
3" = 1'-0"

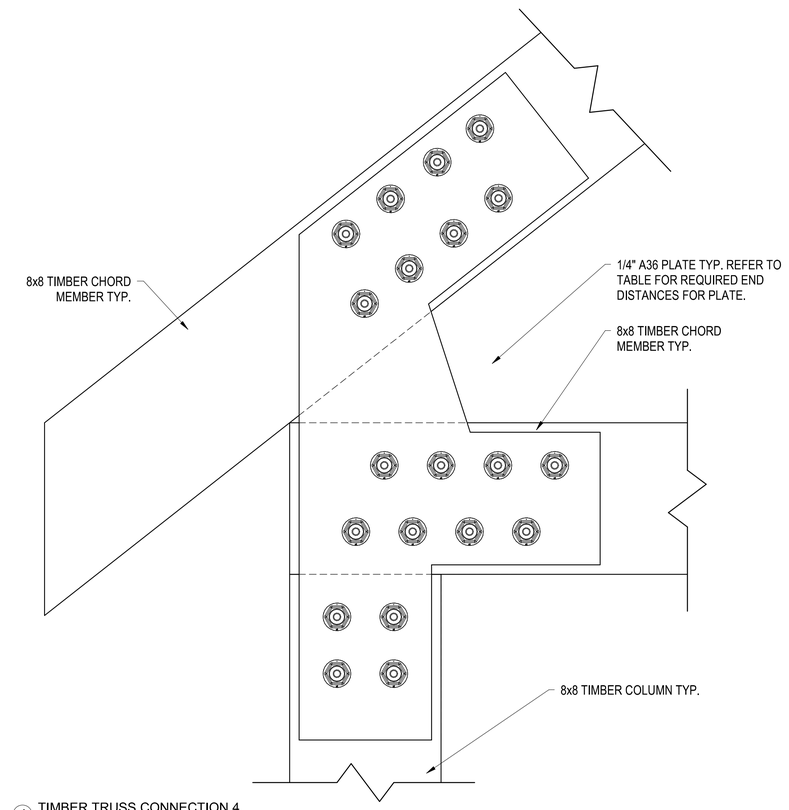

4 TIMBER TRUSS CONNECTION 4
3" = 1'-0"

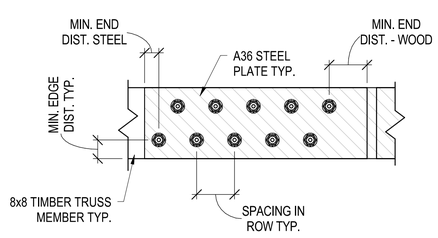

TYPICAL TRUSS CONNECTION SPACINGS

5 TRUSS CONNECTION DISTANCES
1 1/2" = 1'-0"

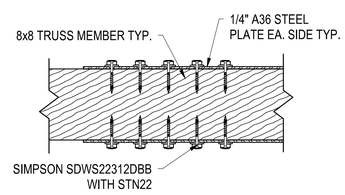

6 TRUSS CONNECTION
1 1/2" = 1'-0"

ALL TIMBER TRUSS CONNECTIONS - SIMPSON SDWS22DBB WITH STN22

TRUSS SPAN	TRUSS SPACING	ROOF PITCH	MINIMUM SCREW SPACING (IN ROW)	MINIMUM END DIST. - WOOD	MINIMUM END DIST. - STEEL	MINIMUM EDGE DISTANCE	NUMBER OF BOLTS REQ. - CHORD	NUMBER OF BOLTS REQ. - WEB
20 FT.	12 FT. C/C	6:12	2-1/2 INCHES	3 INCHES	1-1/2 INCHES	1-1/2 INCHES	8 SCREWS	4 SCREWS

DRYE McGLAMERY ENGINEERING, PLLC
NC FIRM LICENSE #P-1305

NORTH CAROLINA PROFESSIONAL SEAL 040795 ENGINEER HEATH WESTON DRYE 2025-04-02

No.	Description	Date
1	ISSUED FOR REVIEW	2025-03-05
O	ISSUED FOR CONSTRUCTION	2025-04-02

BLUE RIDGE CONSERVANCY
PAVILLION
BOONE GORGE PARK
BOONE, NC 28607

DRYE-MCGLAMERY
ENGINEERING, PLLC
325 McGILL AVENUE NW SUITE 115
CONCORD, NC 28027

ISSUED FOR CONSTRUCTION

DME PROJECT #: 2025045
DRAWN BY CJH
CHECKED BY HWD

TRUSS CONNECTION DETAILS

S-5